COOK TRACT ATHLETIC FIELDS

WHITPAIN TOWNSHIP, MONTGOMERY COUNTY, PENNSYLVANIA

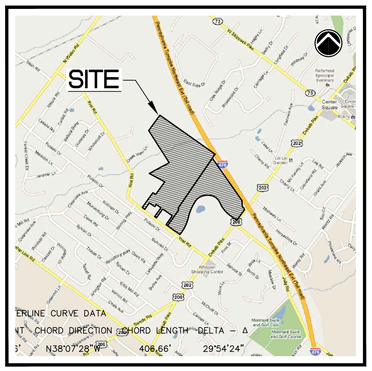

SITE LOCATION MAP 1"= 2,000'

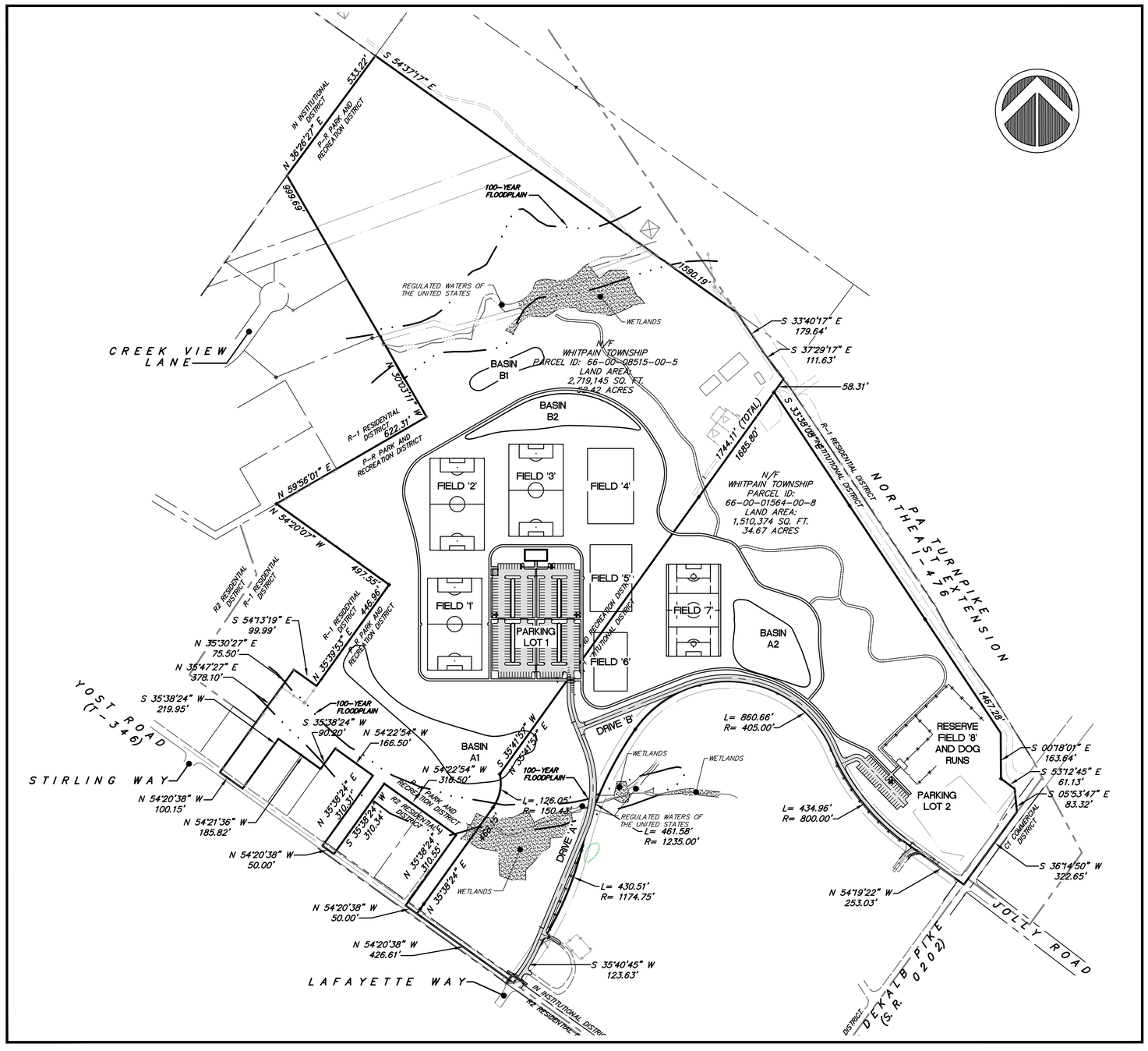

OVERALL CONTEXT MAP
SCALE: 1" = 200'

PLAN INDEX

1	OF	38	COVER SHEET
2	OF	38	HORIZONTAL LAYOUT PLAN 'A'
3	OF	38	HORIZONTAL LAYOUT PLAN 'B'
4	OF	38	HORIZONTAL LAYOUT PLAN 'C'
5	OF	38	HORIZONTAL LAYOUT PLAN 'D'
6	OF	38	AERIAL PHOTOGRAPH PLAN
7	OF	38	EXISTING FEATURES PLAN
8	OF	38	OVERALL GRADING PLAN
9	OF	38	PCSM, GRADING & DRAINAGE PLAN 'A'
10	OF	38	PCSM, GRADING & DRAINAGE PLAN 'B'
11	OF	38	PCSM, GRADING & DRAINAGE PLAN 'C'
12	OF	38	PCSM, GRADING & DRAINAGE PLAN 'D'
13	OF	38	DRIVE 'A' PLAN AND PROFILE
14	OF	38	DRIVE 'B' PLAN AND PROFILE
15	OF	38	DRIVE 'B' PLAN AND PROFILE
16	OF	38	STORM SEWER 'A' AND 'B' PLAN AND PROFILE
17	OF	38	STORM SEWER 'C' AND 'D' PLAN AND PROFILE
18	OF	38	STORM SEWER 'E' PLAN AND PROFILE
19	OF	38	STORM SEWER 'F' PLAN AND PROFILE
20	OF	38	STORM SEWER 'G' AND 'H' PLAN AND PROFILE
21	OF	38	SANITARY SEWER S-A1 TO S-A7 PLAN AND PROFILE
22	OF	38	TREE CLEARING PLAN
23	OF	38	LANDSCAPE PLAN 'A'
24	OF	38	LANDSCAPE PLAN 'B'
25	OF	38	LIGHTING PLAN
26	OF	38	PHASE 1 EROSION & SEDIMENTATION CONTROL PLAN
27	OF	38	PHASE 2 EROSION & SEDIMENTATION CONTROL PLAN
28	OF	38	PHASE 3 EROSION & SEDIMENTATION CONTROL PLAN
28A	OF	38	PHASE 4 EROSION & SEDIMENTATION CONTROL PLAN
29	OF	38	EROSION & SEDIMENTATION CONTROL DETAILS 'A'
30	OF	38	EROSION & SEDIMENTATION CONTROL DETAILS 'B'
31	OF	38	PCSM CONTRUCTION DETAILS PLAN
32	OF	38	CONSTRUCTION DETAILS 'A'
33	OF	38	CONSTRUCTION DETAILS 'B'
34	OF	38	CONSTRUCTION DETAILS 'C'
35	OF	38	SANITARY SEWER DETAILS PLAN 'A'
36	OF	38	SANITARY SEWER DETAILS PLAN 'B'
37	OF	38	IRRIGATION TANK DETAILS PLAN
38	OF	38	IRRIGATION SYSTEM DESIGN

HIBBELN ENGINEERING COMPANY, L.L.C.
CONSULTING ENGINEERS
215-619-9070 PA, NJ, MD & DE
593 Skippack Pike, Suite 300
Blue Bell, Pennsylvania 19422
www.hibbelnengineering.com
IN CONJUNCTION WITH:
Land Concepts
593 Skippack Pike • Suite 300 • Blue Bell, PA 19422

COOK TRACT ATHLETIC FIELDS
PREPARED FOR
WHITPAIN TOWNSHIP
SITE SITUATE IN
WHITPAIN TOWNSHIP
MONTGOMERY COUNTY, PENNSYLVANIA

NO.	REVISIONS	PLAN ORIGINATION DATE
1	COVE COMPLETION PLAN	AUGUST 26, 2011
2	PER ADDITION OF SEGMENT BASIN B PHASE 4 PLAN	JUNE 18, 2012
3	PER MCCD LETTER (2-9-12)	FEBRUARY 10, 2012
4	PER STORM SYTEM 'B'	JANUARY 31, 2012
5	PER MCCD LETTER (1/27/12)	JANUARY 5, 2012
6	PER MCCD LETTER (10-21-11)	NOVEMBER 22, 2011

I HEREBY CERTIFY THAT THIS PLAN IS CORRECT TO THE BEST OF MY KNOWLEDGE, INFORMATION AND BELIEF AND THAT ALL WORK SHALL BE PERFORMED IN ACCORDANCE WITH THIS PLAN AND THE REQUIREMENTS OF THE WHITPAIN TOWNSHIP SUBDIVISION AND LAND DEVELOPMENT ORDINANCE. I ALSO CERTIFY THAT I AM THE OWNER OF THE PROPERTY OR THAT I HAVE BEEN AUTHORIZED BY THE OWNER TO MAKE THIS SUBDIVISION OR LAND DEVELOPMENT PLAN. I ALSO GRANT TO THE TOWNSHIP OF WHITPAIN, ITS AGENTS AND EMPLOYEES PERMISSION TO ENTER UPON THE PROPERTY FOR THE PURPOSE OF INSPECTING THE IMPROVEMENTS APPURTENANT TO THE PLAN.

HIBBELN ENGINEERING COMPANY, L.L.C.
CONSULTING ENGINEERS

COVER SHEET

COOK TRACT ATHLETIC FIELDS
SITE SITUATE IN
WHITPAIN TOWNSHIP
MONTGOMERY COUNTY, PENNSYLVANIA

PROJECT MANAGER: DSC/AJH	DRAFTED BY: JBS
PROJECT NUMBER: 12460	DRAWING FILE: #12460_SHT01
PLAN SCALE: 1"=200'	PLAN SHEET NUMBER 1 OF 38

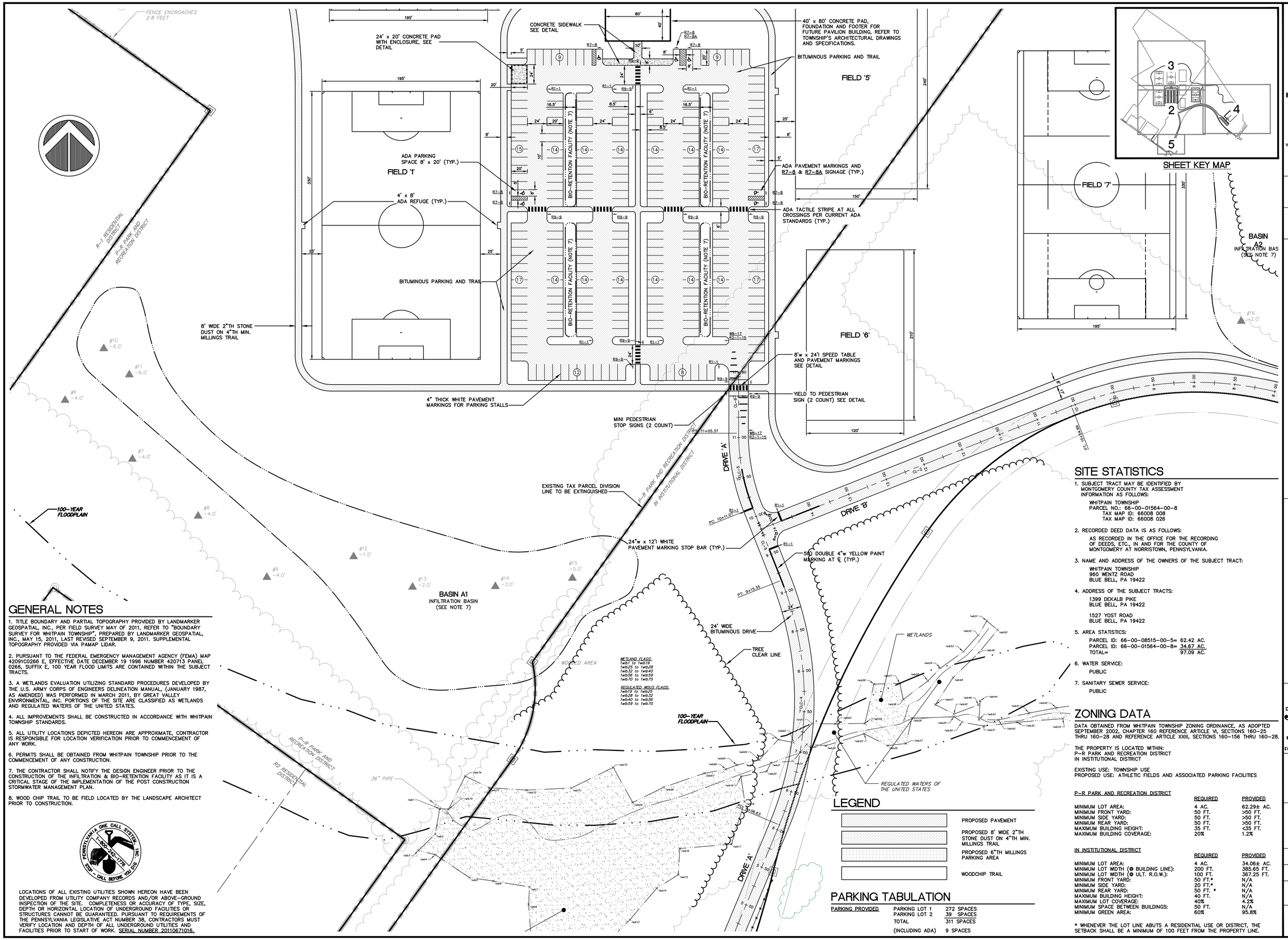

GENERAL NOTES

1. TITLE BOUNDARY AND PARTIAL TOPOGRAPHY PROVIDED BY LANDMARKER GEOSPATIAL, INC., PER FIELD SURVEY MAY OF 2011, REFER TO "BOUNDARY SURVEY FOR WHITPAIN TOWNSHIP", PREPARED BY LANDMARKER GEOSPATIAL, INC., MAY 15, 2011, LAST REVISED SEPTEMBER 9, 2011. SUPPLEMENTAL TOPOGRAPHY PROVIDED VIA PAMAP LIDAR.

2. PURSUANT TO THE FEDERAL EMERGENCY MANAGEMENT AGENCY (FEMA) MAP 42091C0266 E, EFFECTIVE DATE DECEMBER 19 1996 NUMBER 420713 PANEL 0266, SUFFIX E, 100 YEAR FLOOD LIMITS ARE CONTAINED WITHIN THE SUBJECT TRACTS.

3. A WETLANDS EVALUATION UTILIZING STANDARD PROCEDURES DEVELOPED BY THE U.S. ARMY CORPS OF ENGINEERS DELINEATION MANUAL, (JANUARY 1987, AS AMENDED) WAS PERFORMED IN MARCH 2011, BY GREAT VALLEY ENVIRONMENTAL, INC. PORTIONS OF THE SITE ARE CLASSIFIED AS WETLANDS AND REGULATED WATERS OF THE UNITED STATES.

4. ALL IMPROVEMENTS SHALL BE CONSTRUCTED IN ACCORDANCE WITH WHITPAIN TOWNSHIP STANDARDS.

5. ALL UTILITY LOCATIONS DEPICTED HEREON ARE APPROXIMATE, CONTRACTOR IS RESPONSIBLE FOR LOCATION VERIFICATION PRIOR TO COMMENCEMENT OF ANY WORK.

6. PERMITS SHALL BE OBTAINED FROM WHITPAIN TOWNSHIP PRIOR TO THE COMMENCEMENT OF ANY CONSTRUCTION.

7. THE CONTRACTOR SHALL NOTIFY THE DESIGN ENGINEER PRIOR TO THE CONSTRUCTION OF THE INFILTRATION & BIO-RETENTION FACILITY AS IT IS A CRITICAL STAGE OF THE IMPLEMENTATION OF THE POST CONSTRUCTION STORMWATER MANAGEMENT PLAN.

8. WOOD CHIP TRAIL TO BE FIELD LOCATED BY THE LANDSCAPE ARCHITECT PRIOR TO CONSTRUCTION.

PENNSYLVANIA ONE CALL SYSTEM, INC. 1-800-242-1776 — IT'S THE LAW — CALL BEFORE YOU DIG

LOCATIONS OF ALL EXISTING UTILITIES SHOWN HEREON HAVE BEEN DEVELOPED FROM UTILITY COMPANY RECORDS AND/OR ABOVE-GROUND INSPECTION OF THE SITE. COMPLETENESS OR ACCURACY OF TYPE, SIZE, DEPTH OR HORIZONTAL LOCATION OF UNDERGROUND FACILITIES OR STRUCTURES CANNOT BE GUARANTEED. PURSUANT TO REQUIREMENTS OF THE PENNSYLVANIA LEGISLATIVE ACT NUMBER 38, CONTRACTORS MUST VERIFY LOCATION AND DEPTH OF ALL UNDERGROUND UTILITIES AND FACILITIES PRIOR TO START OF WORK. SERIAL NUMBER 20110671016.

LEGEND

- PROPOSED PAVEMENT
- PROPOSED 8' WIDE 2"TH STONE DUST ON 4"TH MIN. MILLINGS TRAIL
- PROPOSED 6"TH MILLINGS PARKING AREA
- WOODCHIP TRAIL

PARKING TABULATION

PARKING PROVIDED		
	PARKING LOT 1	272 SPACES
	PARKING LOT 2	39 SPACES
	TOTAL	311 SPACES
	(INCLUDING ADA)	9 SPACES

SITE STATISTICS

1. SUBJECT TRACT MAY BE IDENTIFIED BY MONTGOMERY COUNTY TAX ASSESSMENT INFORMATION AS FOLLOWS:

   WHITPAIN TOWNSHIP
   PARCEL NO.: 66-00-01564-00-8
   TAX MAP ID: 66008 008
   TAX MAP ID: 66008 026

2. RECORDED DEED DATA IS AS FOLLOWS:

   AS RECORDED IN THE OFFICE FOR THE RECORDING OF DEEDS, ETC., IN AND FOR THE COUNTY OF MONTGOMERY AT NORRISTOWN, PENNSYLVANIA.

3. NAME AND ADDRESS OF THE OWNERS OF THE SUBJECT TRACT:

   WHITPAIN TOWNSHIP
   960 WENTZ ROAD
   BLUE BELL, PA 19422

4. ADDRESS OF THE SUBJECT TRACTS:

   1399 DEKALB PIKE
   BLUE BELL, PA 19422

   1527 YOST ROAD
   BLUE BELL, PA 19422

5. AREA STATISTICS:

   PARCEL ID: 66-00-08515-00-5= 62.42 AC.
   PARCEL ID: 66-00-01564-00-8= 34.67 AC.
   TOTAL= 97.09 AC.

6. WATER SERVICE:

   PUBLIC

7. SANITARY SEWER SERVICE:

   PUBLIC

ZONING DATA

DATA OBTAINED FROM WHITPAIN TOWNSHIP ZONING ORDINANCE, AS ADOPTED SEPTEMBER 2002, CHAPTER 160 REFERENCE ARTICLE VI, SECTIONS 160-25 THRU 160-28 AND REFERENCE ARTICLE XXIII, SECTIONS 160-156 THRU 160-28.

THE PROPERTY IS LOCATED WITHIN:
P-R PARK AND RECREATION DISTRICT
IN INSTITUTIONAL DISTRICT

EXISTING USE: TOWNSHIP USE
PROPOSED USE: ATHLETIC FIELDS AND ASSOCIATED PARKING FACILITIES

P-R PARK AND RECREATION DISTRICT

	REQUIRED	PROVIDED
MINIMUM LOT AREA:	4 AC.	62.29± AC.
MINIMUM FRONT YARD:	50 FT.	>50 FT.
MINIMUM SIDE YARD:	50 FT.	>50 FT.
MINIMUM REAR YARD:	50 FT.	>50 FT.
MAXIMUM BUILDING HEIGHT:	35 FT.	<35 FT.
MAXIMUM BUILDING COVERAGE:	20%	1.2%

IN INSTITUTIONAL DISTRICT

	REQUIRED	PROVIDED
MINIMUM LOT AREA:	4 AC.	34.06± AC.
MINIMUM LOT WIDTH (@ BUILDING LINE):	200 FT.	385.65 FT.
MINIMUM LOT WIDTH (@ ULT. R.O.W.):	100 FT.	367.25 FT.
MINIMUM FRONT YARD:	50 FT.*	N/A
MINIMUM SIDE YARD:	20 FT.*	N/A
MINIMUM REAR YARD:	50 FT. *	N/A
MAXIMUM BUILDING HEIGHT:	40 FT.	N/A
MAXIMUM LOT COVERAGE:	40%	4.2%
MINIMUM SPACE BETWEEN BUILDINGS:	50 FT.	N/A
MINIMUM GREEN AREA:	60%	95.8%

* WHENEVER THE LOT LINE ABUTS A RESIDENTIAL USE OR DISTRICT, THE SETBACK SHALL BE A MINIMUM OF 100 FEET FROM THE PROPERTY LINE.

HIBBELN ENGINEERING COMPANY, L.L.C.
CONSULTING ENGINEERS
215-619-9070 PA, NJ, MD & DE
593 Skippack Pike, Suite 300
Blue Bell, Pennsylvania 19422
www.hibbelnengineering.com
IN CONJUNCTION WITH:
LandConcepts
593 Skippack Pike • Suite 300 • Blue Bell, PA 19422

COOK TRACT ATHLETIC FIELDS

PREPARED FOR
WHITPAIN TOWNSHIP
SITE SITUATE IN
WHITPAIN TOWNSHIP
MONTGOMERY COUNTY, PENNSYLVANIA

NO.	REVISIONS	DATE
1	100% COMPLETION PLAN.	AUGUST 26, 2011
2	PER SWM LETTER (1/7/12)	NOVEMBER 22, 2011
3	PER MCCD LETTER (2-29-12)	JANUARY 6, 2012
4	PER STORM STEM 'B'	JANUARY 31, 2012
5	PER MCCD LETTER (2-29-12)	FEBRUARY 10, 2012
6	PCD ADDITION OF SEDIMENT BASIN B PHASE 4 PLAN.	JUNE 18, 2012

THE FOLLOWING COMPANIES & PERSONS HAVE ARCHITECTURAL AND/OR ENGINEERING COPYRIGHTS TO THE PLANS, SPECIFICATIONS, AND/OR DESIGNS SHOWN HEREON AND ARE NOT TO BE USED IN ANY WAY FOR ANY PURPOSE, AT ANY LOCATION, EXCEPT FOR THE SPECIFIED PROJECT, WITHOUT THE WRITTEN PERMISSION OF EACH COMPANY AND PERSON: HIBBELN ENGINEERING COMPANY, L.L.C.; LAND CONCEPTS; THE PENNONI ASSOCIATES INC.; GREAT VALLEY ENVIRONMENTAL, INC.; AND LANDMARKER GEOSPATIAL, INC.

HIBBELN ENGINEERING COMPANY, L.L.C.
CONSULTING ENGINEERS

HORIZONTAL LAYOUT PLAN 'A'

COOK TRACT ATHLETIC FIELDS
SITE SITUATE IN
WHITPAIN TOWNSHIP
MONTGOMERY COUNTY, PENNSYLVANIA

PROJECT MANAGER:	DRAFTED BY:
DSC/AJH	JBS
PROJECT NUMBER:	DRAWING FILE:
12460	#12460_SHT02-05
PLAN SCALE:	PLAN SHEET NUMBER
1" = 50'	2 OF 38

0' 25' 50' 100'
GRAPHIC SCALE

LEGEND

- PROPOSED PAVEMENT
- PROPOSED 8' WIDE 2"TH STONE DUST ON 4"TH MIN. MILLINGS TRAIL
- PROPOSED 6"TH MILLINGS PARKING AREA
- WOODCHIP TRAIL

WOODED AREA

REGULATED WATERS OF THE UNITED STATES

SANITARY MH

APPROX. LOCATION OF 18" SANITARY SEWER INTERCEPTOR LINE

SANITARY MH

SANITARY MH

SANITARY MH

CENTERLINE OF STONY CREEK

SANITARY SEWER RIGHT-OF-WAY SEE SURVEY NOTE #10

TREE CLEAR LINE

WETLAND FLAGS: 2wlo3 to 2wlo26

REGULATED WOUS FLAGS: 2wlo1 to 2wlo3 2wlo26 to 2wlo41

WETLANDS

100-YEAR FLOODPLAIN

#1 -4.0'

#2 -4.0'

#3 -3.5'

#4 -3.5'

#5 -3.5'

BASIN B1

BASIN B2

EXISTING 50 X 100 GARAGE

EXISTING EQUIPMENT CABINETS

EXISTING CELL TOWERS

8' WIDE 2"TH STONE DUST ON 4"TH MIN. MILLINGS TRAIL

8'w WOODCHIP TRAIL (TYP.) SEE DETAIL REFER TO NOTE 8, SHEET 2 (NOT IN CONTRACT)

TOWNSHIP SHALL PROVIDE ACCESSWAY GATE FOR AUTHORIZED PERSONNEL ONLY

R-1 RESIDENTIAL DISTRICT

P-R PARK AND RECREATION DISTRICT

FENCE ENCROACHES 3.0 FEET

FENCE ENCROACHES 2.8 FEET

TREELINE

WOODED AREA

FIELD '2' — 330' × 195'

FIELD '3' — 330' × 195'

FIELD '4' — 270' × 165'

FIELD '5' — 240'

24' x 20' CONCRETE PAD WITH ENCLOSURE, SEE DETAIL

CONCRETE SIDEWALK SEE DETAIL

40' x 80' CONCRETE PAD, FOUNDATION AND FOOTER FOR FUTURE PAVILION BUILDING, REFER TO TOWNSHIP'S ARCHITECTURAL DRAWINGS AND SPECIFICATIONS.

BITUMINOUS PARKING AND TRAIL

R7-8 R7-8A R9-9 R1-1

SHEET KEY MAP

HIBBELN ENGINEERING COMPANY, L.L.C.
CONSULTING ENGINEERS
215-619-9070 PA, NJ, MD & DE
593 Skippack Pike, Suite 300
Blue Bell, Pennsylvania 19422
www.hibbelnengineering.com

IN CONJUNCTION WITH:

LandConcepts
593 Skippack Pike • Suite 300 • Blue Bell, PA 19422

COOK TRACT ATHLETIC FIELDS

PREPARED FOR
WHITPAIN TOWNSHIP

SITE SITUATE IN
WHITPAIN TOWNSHIP
MONTGOMERY COUNTY, PENNSYLVANIA

NO.	REVISIONS	DATE
1	TOOS COMPLETION PLAN	AUGUST 26, 2011
2	PER MCCD REVIEW LETTER	NOVEMBER 22, 2011
3	PER MCCD LETTER (1/27/12)	DECEMBER 8, 2011
4	PER STORM SYSTEM 'B'	JANUARY 5, 2012
5	PER MCCD LETTER (2-9-12)	JANUARY 31, 2012
6	PER ADDITION OF SEDIMENT BASIN B PHASE 4 PLAN	FEBRUARY 10, 2012
		JUNE 18, 2012

ALL DRAWINGS, MODELS & COMPUTER FILES PREPARED BY HIBBELN ENGINEERING COMPANY, L.L.C. ARE INSTRUMENTS OF SERVICE FOR USE SOLELY WITH RESPECT TO THIS PROJECT. ALL SUCH INSTRUMENTS SHALL REMAIN THE PROPERTY OF HIBBELN ENGINEERING COMPANY, L.L.C. AND SHALL NOT BE USED BY ANY PERSON OR ENTITY FOR ANY PURPOSE UNRELATED TO THIS PROJECT. ANY SUCH UNAUTHORIZED USE, WITHOUT THE EXPRESS WRITTEN CONSENT OF HIBBELN ENGINEERING COMPANY, L.L.C. SHALL BE AT THE USER'S SOLE RISK AND WITHOUT LIABILITY TO HIBBELN ENGINEERING COMPANY, L.L.C. AND SHALL BE DEEMED AN INFRINGEMENT OF COPYRIGHT.

HIBBELN ENGINEERING COMPANY, L.L.C.
CONSULTING ENGINEERS

HORIZONTAL LAYOUT PLAN 'B'

COOK TRACT ATHLETIC FIELDS
SITE SITUATE IN
WHITPAIN TOWNSHIP
MONTGOMERY COUNTY, PENNSYLVANIA

PROJECT MANAGER:	DRAFTED BY:
DSC/AJH	JBS
PROJECT NUMBER:	DRAWING FILE:
12460	#12460_SHT02-05
PLAN SCALE:	PLAN SHEET NUMBER
1" = 50'	3 OF 38

0' 25' 50' 100'
GRAPHIC SCALE

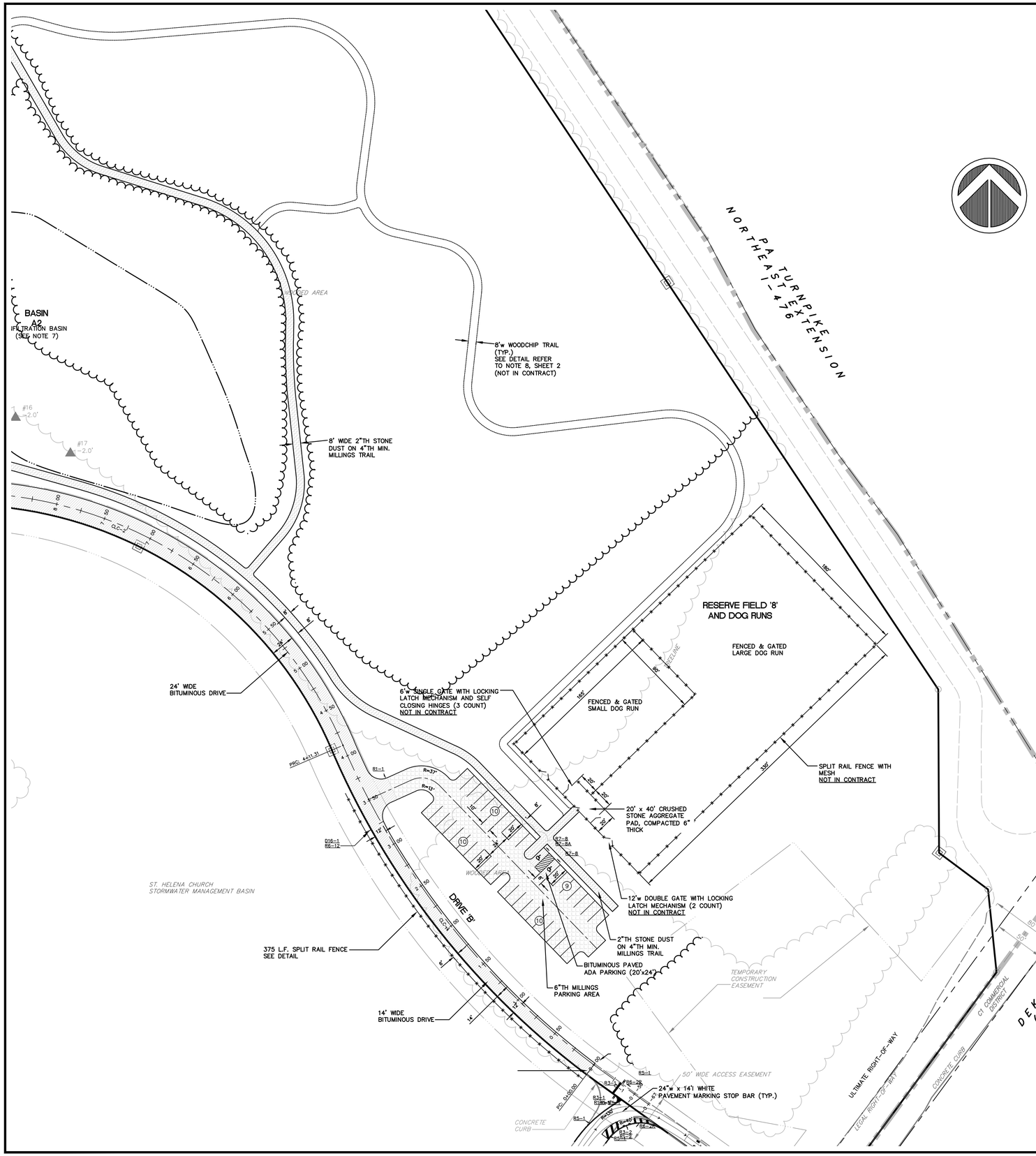

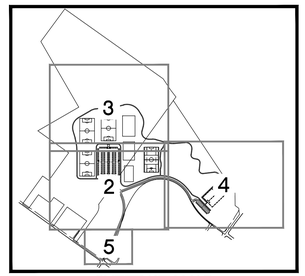

SHEET KEY MAP

LEGEND

- PROPOSED PAVEMENT
- PROPOSED 8' WIDE 2"TH STONE DUST ON 4"TH MIN. MILLINGS TRAIL
- PROPOSED 6"TH MILLINGS PARKING AREA
- WOODCHIP TRAIL

HIBBELN ENGINEERING COMPANY, L.L.C.
CONSULTING ENGINEERS
215-619-9070 PA, NJ, MD & DE
593 Skippack Pike, Suite 300
Blue Bell, Pennsylvania 19422
www.hibbelnengineering.com
IN CONJUNCTION WITH:
LandConcepts
593 Skippack Pike • Suite 300 • Blue Bell, PA 19422

COOK TRACT ATHLETIC FIELDS

PREPARED FOR
WHITPAIN TOWNSHIP

SITE SITUATE IN
WHITPAIN TOWNSHIP
MONTGOMERY COUNTY, PENNSYLVANIA

NO.	REVISIONS	PLAN ORIGINATION DATE
1	100% COMPLETION PLAN	AUGUST 26, 2011
2	PER MCCD LETTER (1/24/12) & PER SWM SITE LOCATION	NOVEMBER 22, 2011
3	PER MCCD LETTER (1/24/12)	JANUARY 6, 2012
4	PER STORM SYSTEM 'B'	JANUARY 31, 2012
5	PER MCCD LETTER (2-29-12)	FEBRUARY 10, 2012
6	PER ADDITION OF SEDIMENT BASIN 6 PHASE 4 PLAN	JUNE 19, 2012

THE ARCHITECT OWNS THE COPYRIGHT IN THESE DRAWINGS AND SPECIFICATIONS. THE ARCHITECT'S DRAWINGS AND SPECIFICATIONS ARE NOT TO BE USED BY THE OWNER OR ANY OTHER PERSONS OR ENTITIES ON ANY OTHER PROJECT, FOR ADDITIONS TO THIS PROJECT, OR FOR COMPLETION OF THIS PROJECT BY OTHERS, EXCEPT BY AGREEMENT IN WRITING AND WITH APPROPRIATE COMPENSATION TO THE ARCHITECT. ALL REPRODUCTION RIGHTS ARE RESERVED BY THE ARCHITECT. ALL DRAWINGS, SPECIFICATIONS AND COPIES THEREOF FURNISHED BY THE ARCHITECT ARE AND SHALL REMAIN THE ARCHITECT'S PROPERTY. THEY ARE NOT TO BE USED BY THE OWNER OR ANY OTHER PERSONS OR ENTITIES ON ANY OTHER PROJECT, FOR ADDITIONS TO THIS PROJECT, OR FOR COMPLETION OF THIS PROJECT BY OTHERS, EXCEPT BY AGREEMENT IN WRITING AND WITH APPROPRIATE COMPENSATION TO THE ARCHITECT.

HIBBELN ENGINEERING COMPANY, L.L.C.
CONSULTING ENGINEERS

HORIZONTAL LAYOUT PLAN 'C'

COOK TRACT ATHLETIC FIELDS
SITE SITUATE IN
WHITPAIN TOWNSHIP
MONTGOMERY COUNTY, PENNSYLVANIA

PROJECT MANAGER:	DRAFTED BY:
DSC/AJH	JBS
PROJECT NUMBER:	DRAWING FILE:
12460	#12460_SHT02-05
PLAN SCALE:	PLAN SHEET NUMBER
1" = 50'	4 OF 38

0' 25' 50' 100'
GRAPHIC SCALE

CONSTRUCTION SCHEDULE

TIMELINESS OF THE WORK WITHIN THE SCOPE OF THE COOK TRACT ATHLETIC FIELDS IS OF THE ESSENCE. THE CONTRACTOR SHALL WORK IN AN EXPEDITIOUS MANNER AND CONDUCT WORK OPERATIONS WHILE ON THE SITE IN A WAY THAT MINIMIZES THE INCONVENIENCE TO ST. HELENA CHURCH. FREE, UNINTERRUPTED INGRESS, EGRESS AND REGRESS SHALL BE MAINTAINED FOR BUSES, PARENTS AND VISITORS TO THE CHURCH. THE CONTRACTOR SHALL ERECT AND MAINTAIN AND MOVE AS NECESSARY, SAFETY EXCLUSIONARY FENCE, SIGNS AND TRAFFIC CONTROL DEVICES (CONES, RAILS, ETC.) IN SUITABLE LOCATIONS AND OF SUFFICIENT SIZE TO INFORM AND SHOW VEHICLE DRIVERS LEAVING OR ENTERING THE CHURCH. THE CONTRACTOR SHALL COORDINATE THEIR CONSTRUCTION SCHEDULE WITH ST. HELENA CHURCH.

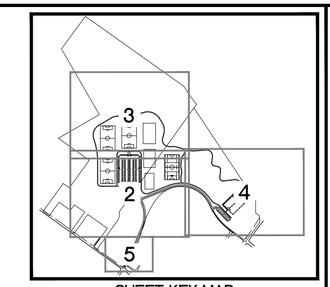

SHEET KEY MAP

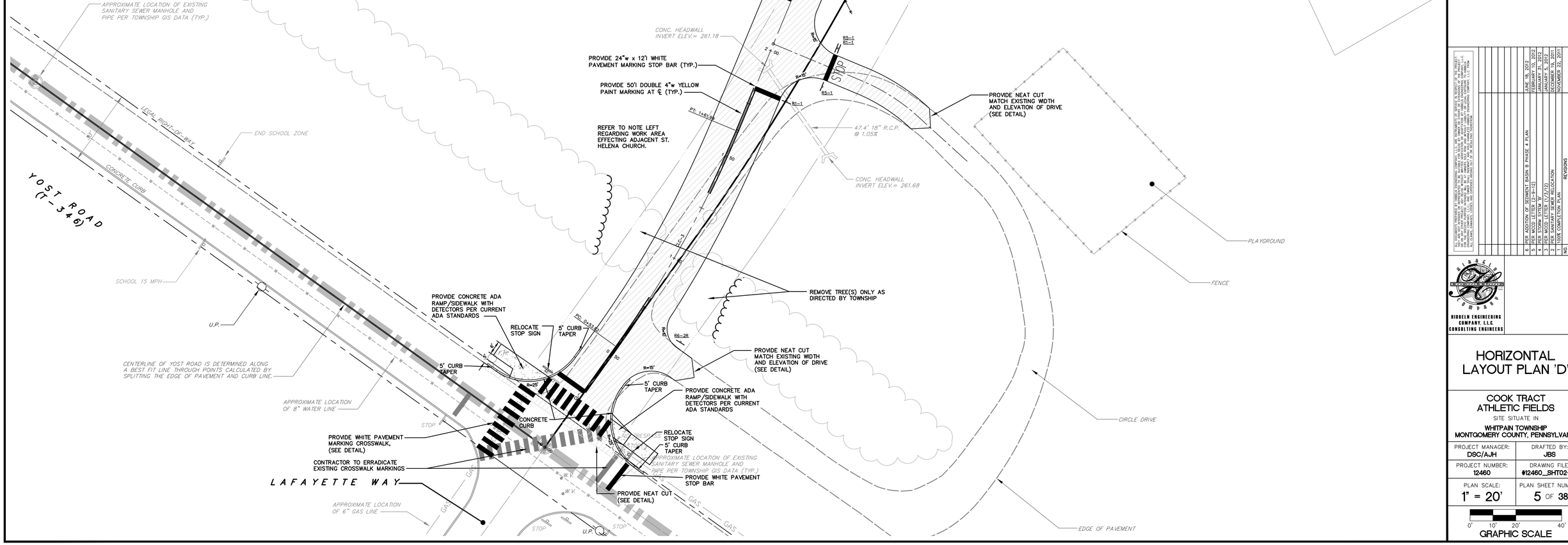

HIBBELN ENGINEERING COMPANY, L.L.C.
CONSULTING ENGINEERS
215-619-9070 PA, NJ, MD & DE
593 Skippack Pike, Suite 300
Blue Bell, Pennsylvania 19422
www.hibbelnengineering.com
IN CONJUNCTION WITH:
Land Concepts
593 Skippack Pike • Suite 300 • Blue Bell, PA 19422

COOK TRACT ATHLETIC FIELDS

PREPARED FOR
WHITPAIN TOWNSHIP

SITE SITUATE IN
WHITPAIN TOWNSHIP
MONTGOMERY COUNTY, PENNSYLVANIA

NO.	REVISIONS	PLAN ORIGINATION DATE
1	COOK COMPLETION PLAN	AUGUST 26, 2011
2	PER MCCD LETTER (2-9-12)	NOVEMBER 22, 2011
3	PER MCCD LETTER (1/27/12)	JANUARY 5, 2012
4	PER STORM SYSTEM 'B'	JANUARY 31, 2012
5	PER MCCD LETTER (4/4/12)	FEBRUARY 10, 2012
6	PER ADDITION OF SEDIMENT BASIN 8 PHASE 4 PLAN	JUNE 18, 2012

THE DESIGNS, DRAWINGS AND SPECIFICATIONS CONTAINED HEREIN ARE THE PROPERTY OF HIBBELN ENGINEERING COMPANY, L.L.C. AND ARE NOT TO BE USED IN WHOLE OR IN PART FOR ANY PURPOSE OTHER THAN THE SPECIFIC PROJECT FOR WHICH THEY WERE PREPARED AND DEVELOPED. NO PART THEREOF SHALL BE COPIED, DISCLOSED TO OR DISTRIBUTED TO OR BY ANY PERSON, FIRM OR CORPORATION FOR ANY PURPOSE WHATSOEVER WITHOUT THE PRIOR WRITTEN PERMISSION OF HIBBELN ENGINEERING COMPANY, L.L.C. FROM WHOM PERMISSION, IF GRANTED, MUST BE OBTAINED BEFORE ANY USE OR REPRODUCTION.

HIBBELN ENGINEERING COMPANY, L.L.C.
CONSULTING ENGINEERS

HORIZONTAL LAYOUT PLAN 'D'

COOK TRACT
ATHLETIC FIELDS
SITE SITUATE IN
WHITPAIN TOWNSHIP
MONTGOMERY COUNTY, PENNSYLVANIA

PROJECT MANAGER: DSC/AJH	DRAFTED BY: JBS
PROJECT NUMBER: 12460	DRAWING FILE: #12460_SHT02-05
PLAN SCALE: 1" = 20'	PLAN SHEET NUMBER: 5 OF 38

0' 10' 20' 40'
GRAPHIC SCALE

HIBBELN ENGINEERING COMPANY, L.L.C.
CONSULTING ENGINEERS
215-619-9070 PA, NJ, MD & DE
593 Skippack Pike, Suite 300
Blue Bell, Pennsylvania 19422
www.hibbelnengineering.com
IN CONJUNCTION WITH:
LandConcepts
593 Skippack Pike • Suite 300 • Blue Bell, PA 19422

COOK TRACT ATHLETIC FIELDS

PREPARED FOR
WHITPAIN TOWNSHIP
SITE SITUATE IN
WHITPAIN TOWNSHIP
MONTGOMERY COUNTY, PENNSYLVANIA

NO.	REVISIONS	DATE
6	PER ADDITION OF SEDIMENT BASIN B PHASE 4 PLAN	JUNE 18, 2012
5	PER MCCD LETTER (2-9-12)	FEBRUARY 10, 2012
4	PER STORM SYSTEM 'B'	JANUARY 31, 2012
3	PER MCCD LETTER (1/3/12)	JANUARY 5, 2012
2	PER SANITARY SEWER RELOCATION	DECEMBER 19, 2011
1	100% COMPLETION PLAN	NOVEMBER 22, 2011
	PLAN ORIGINATION DATE	AUGUST 26, 2011

HIBBELN ENGINEERING COMPANY, L.L.C.
CONSULTING ENGINEERS

AERIAL PHOTOGRAPH PLAN

COOK TRACT
ATHLETIC FIELDS
SITE SITUATE IN
WHITPAIN TOWNSHIP
MONTGOMERY COUNTY, PENNSYLVANIA

PROJECT MANAGER: DSC/AJH	DRAFTED BY: JBS
PROJECT NUMBER: 12460	DRAWING FILE: #12460_SHT06
PLAN SCALE: 1" = 200'	PLAN SHEET NUMBER 6 OF 38

0' 100' 200' 300'
GRAPHIC SCALE

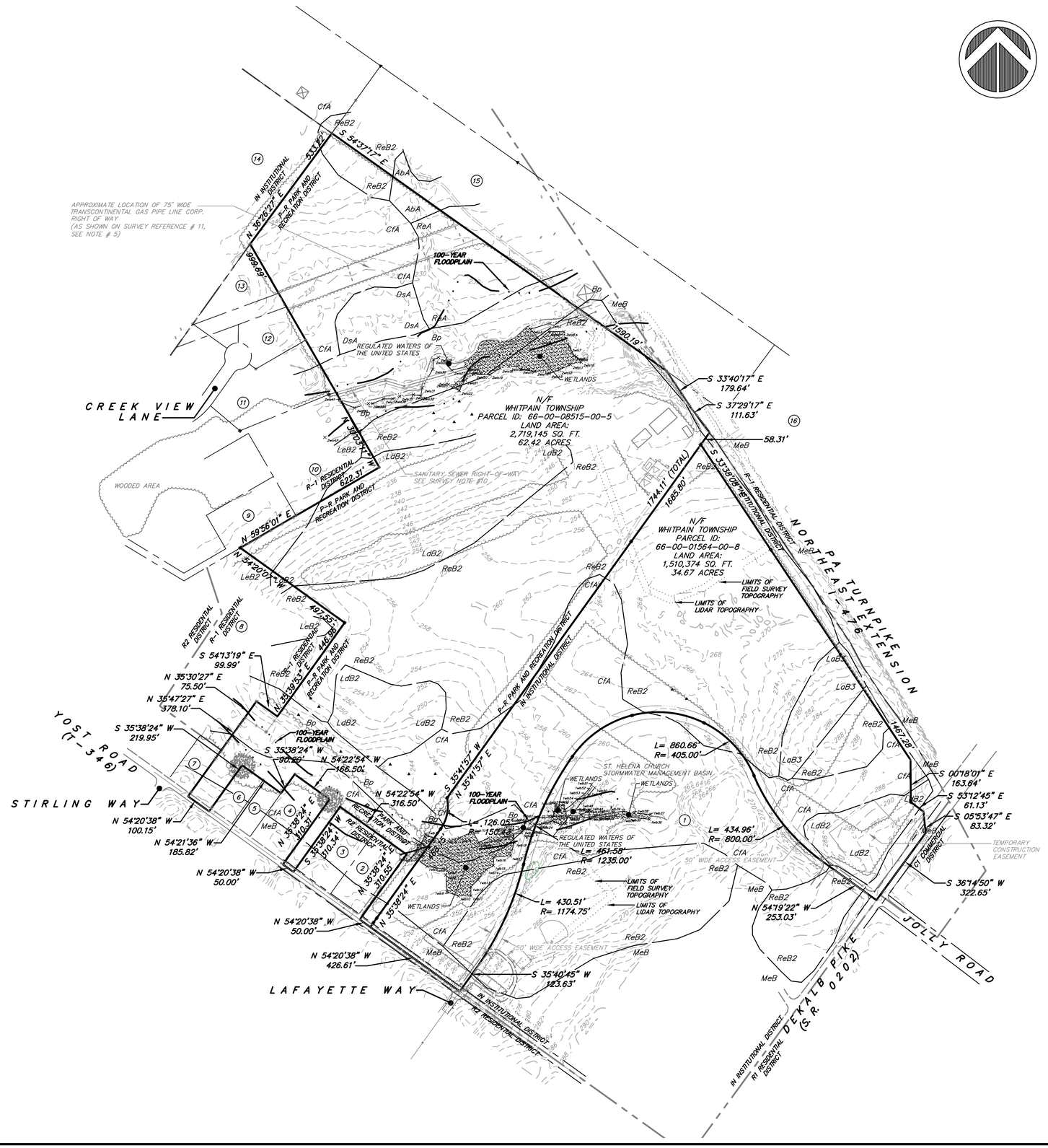

SITE STATISTICS

1. SUBJECT TRACT MAY BE IDENTIFIED BY MONTGOMERY COUNTY TAX ASSESSMENT INFORMATION AS FOLLOWS:
   WHITPAIN TOWNSHIP
   PARCEL NO.: 66-00-01564-00-8
   TAX MAP ID: 66008 008
   TAX MAP ID: 66008 026

2. RECORDED DEED DATA IS AS FOLLOWS:
   AS RECORDED IN THE OFFICE FOR THE RECORDING OF DEEDS, ETC., IN AND FOR THE COUNTY OF MONTGOMERY AT NORRISTOWN, PENNSYLVANIA.

3. NAME AND ADDRESS OF THE OWNERS OF THE SUBJECT TRACT:
   WHITPAIN TOWNSHIP
   960 WENTZ ROAD
   BLUE BELL, PA 19422

4. ADDRESS OF THE SUBJECT TRACTS:
   1399 DEKALB PIKE
   BLUE BELL, PA 19422

   1527 YOST ROAD
   BLUE BELL, PA 19422

5. AREA STATISTICS:

PARCEL ID: 66-00-08515-00-5=	62.42 AC.	
PARCEL ID: 66-00-01564-00-8=	34.67 AC.	
TOTAL=		97.09 AC.

6. WATER SERVICE:
   PUBLIC

7. SANITARY SEWER SERVICE:
   PUBLIC

GENERAL NOTES

1. TITLE BOUNDARY AND PARTIAL TOPOGRAPHY PROVIDED BY LANDMARKER GEOSPATIAL, INC., PER FIELD SURVEY MAY OF 2011, REFER TO "BOUNDARY SURVEY FOR WHITPAIN TOWNSHIP", PREPARED BY LANDMARKER GEOSPATIAL, INC., MAY 15, 2011, LAST REVISED SEPTEMBER 9, 2011. SUPPLEMENTAL TOPOGRAPHY PROVIDED VIA PAMAP LIDAR.

2. PURSUANT TO THE FEDERAL EMERGENCY MANAGEMENT AGENCY (FEMA) MAP 42091C0286 E, EFFECTIVE DATE DECEMBER 19 1996 NUMBER 4207I3 PANEL 0266, SUFFIX E, 100 YEAR FLOOD LIMITS ARE CONTAINED WITHIN THE SUBJECT TRACTS.

3. A WETLANDS EVALUATION UTILIZING STANDARD PROCEDURES DEVELOPED BY THE U.S. ARMY CORPS OF ENGINEERS DELINEATION MANUAL, (JANUARY 1987, AS AMENDED) WAS PERFORMED IN MARCH 2011, BY GREAT VALLEY ENVIRONMENTAL, INC. PORTIONS OF THE SITE ARE CLASSIFIED AS WETLANDS AND REGULATED WATERS OF THE UNITED STATES.

4. ALL IMPROVEMENTS SHALL BE CONSTRUCTED IN ACCORDANCE WITH WHITPAIN TOWNSHIP STANDARDS.

5. ALL UTILITY LOCATIONS DEPICTED HEREON ARE APPROXIMATE, CONTRACTOR IS RESPONSIBLE FOR LOCATION VERIFICATION PRIOR TO COMMENCEMENT OF ANY WORK.

6. PERMITS SHALL BE OBTAINED FROM WHITPAIN TOWNSHIP PRIOR TO THE COMMENCEMENT OF ANY CONSTRUCTION.

7. THE CONTRACTOR SHALL NOTIFY THE DESIGN ENGINEER PRIOR TO THE CONSTRUCTION OF THE INFILTRATION & BIO-RETENTION FACILITY AS IT IS A CRITICAL STAGE OF THE IMPLEMENTATION OF THE POST CONSTRUCTION STORMWATER MANAGEMENT PLAN.

8. WOOD CHIP TRAIL TO BE FIELD LOCATED BY THE LANDSCAPE ARCHITECT PRIOR TO CONSTRUCTION.

SOILS DATA

DATA OBTAINED FROM SOIL SURVEY OF MONTGOMERY COUNTY, PENNSYLVANIA, ISSUED APRIL 1967.

AbA – ABBOTTSTOWN SILT LOAM, 0 TO 3 PERCENT SLOPES; HSG C
Bp – BOWMANSVILLE SILT LOAM; HSG B/D
CfA – CHALFONT SILT LOAM, 0 TO 3 PERCENT SLOPES; HSG C
DsA – DOYLESTOWN SILT LOAM, 0 TO 3 PERCENT SLOPES; HSG D
LoB3 – LANSDALE SILT LOAM, THIN, 3 TO 8 PERCENT SLOPES; HSG B
LdB2 – LANSDALE SILT LOAM, 3 TO 8 PERCENT SLOPES, HSG B
MeB – MADE LAND, SHALE AND SANDSTONE MATERIALS, SLOPING
ReA – READINGTON SILT LOAM, 0 TO 3 PERCENT SLOPES; HSG C
ReB2 – READINGTON SILT LOAM, 3 TO 8 PERCENT SLOPES; HSG C

HIBBELN ENGINEERING COMPANY, L.L.C.
CONSULTING ENGINEERS
215-619-9070 PA, NJ, MD & DE
593 Skippack Pike, Suite 300
Blue Bell, Pennsylvania 19422
www.hibbelnengineering.com
IN CONJUNCTION WITH:
Land Concepts
593 Skippack Pike • Suite 300 • Blue Bell, PA 19422

COOK TRACT ATHLETIC FIELDS

PREPARED FOR
WHITPAIN TOWNSHIP
SITE SITUATE IN
WHITPAIN TOWNSHIP
MONTGOMERY COUNTY, PENNSYLVANIA

NO.	REVISIONS PLAN ORIGINATION DATE	AUGUST 26, 2011
1	TCDE COMPLETION PLAN	NOVEMBER 22, 2011
2	PER BCDE LETTER (2-9-12)	JANUARY 5, 2012
3	PER MCCD LETTER (1/27/12)	JANUARY 31, 2012
4	PER STORM SYSTEM 19	FEBRUARY 10, 2012
5	PER MCCD LETTER (2-29-12)	MARCH 5, 2012
6	PER ADDITION OF SEDIMENT BASIN 8 PHASE 4 PLAN	JUNE 18, 2012

THE ENGINEERING SERVICES CONTAINED HEREIN HAVE BEEN PERFORMED IN ACCORDANCE WITH THE CODE OF PROFESSIONAL RESPONSIBILITY AND REGULATIONS OF THE PENNSYLVANIA STATE BOARD OF REGISTRATION FOR PROFESSIONAL ENGINEERS, LAND SURVEYORS AND GEOLOGISTS. NO WARRANTY, EXPRESS OR IMPLIED, IS MADE. THESE PLANS AND/OR DOCUMENTS WERE PREPARED FOR THE PROJECT AND CLIENT NOTED HEREIN. THE REUSE OF THESE PLANS AND/OR DOCUMENTS ON ANY OTHER PROJECT, BY THE CLIENT OR BY OTHERS, WITHOUT THE EXPRESS WRITTEN PERMISSION OF HIBBELN ENGINEERING COMPANY, L.L.C. WILL BE AT THE SOLE RISK OF THE USER AND WITHOUT LIABILITY OR LEGAL EXPOSURE TO HIBBELN ENGINEERING COMPANY, L.L.C.

HIBBELN ENGINEERING COMPANY, L.L.C.
CONSULTING ENGINEERS

EXISTING FEATURES PLAN

COOK TRACT
ATHLETIC FIELDS
SITE SITUATE IN
WHITPAIN TOWNSHIP
MONTGOMERY COUNTY, PENNSYLVANIA

PROJECT MANAGER: DSC/AJH	DRAFTED BY: JBS
PROJECT NUMBER: 12460	DRAWING FILE: #12460_SHT07
PLAN SCALE: 1" = 200'	PLAN SHEET NUMBER 7 OF 38

0' 100' 200' 300'
GRAPHIC SCALE

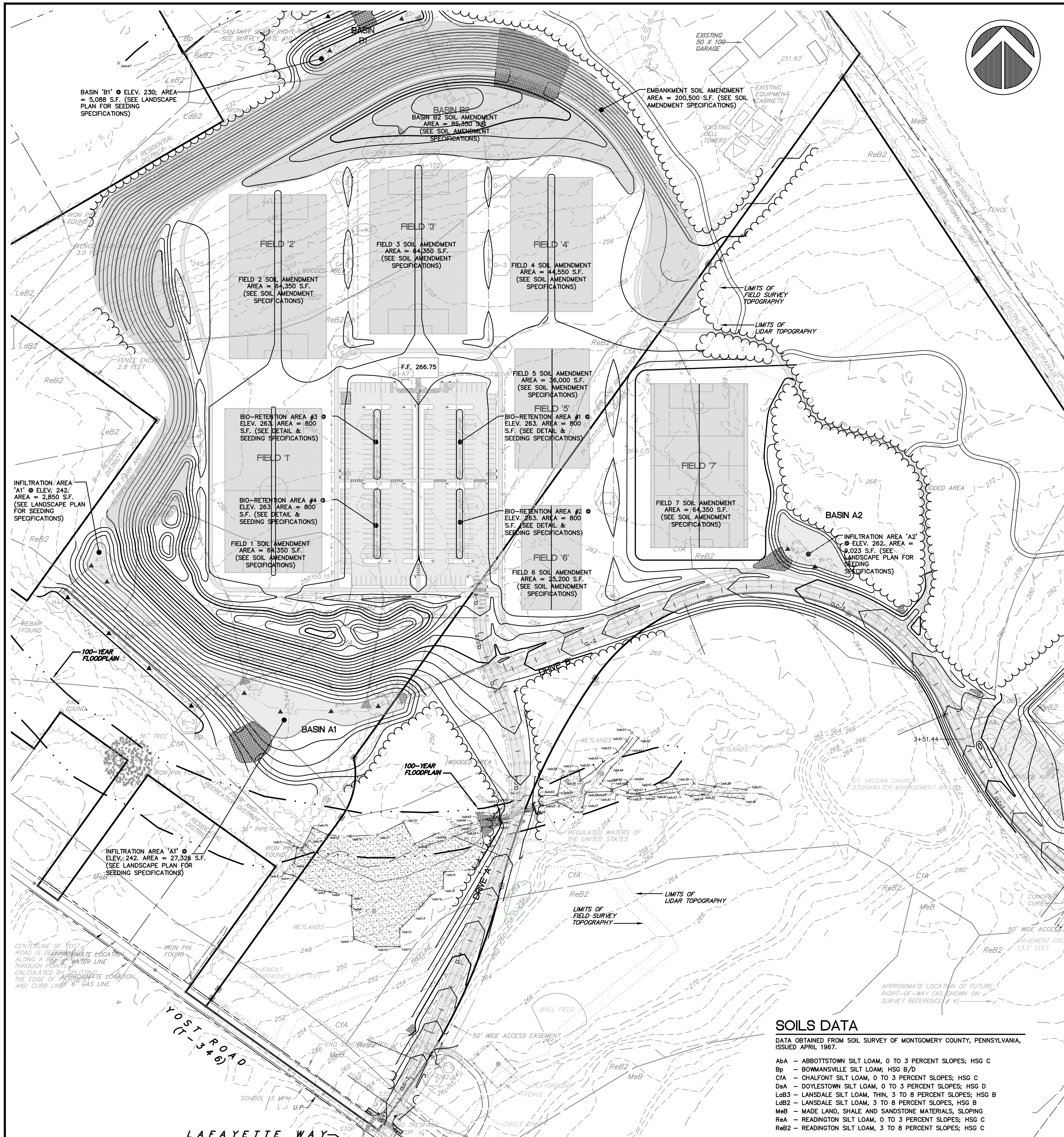

LEGEND

- SOILS LINE
- EXISTING CONTOUR
- EXISTING INDEX CONTOUR
- EXISTING TREE CANOPY
- INFILTRATION TEST LOCATION
- EXISTING WETLANDS
- PROPOSED PAVEMENT
- PROPOSED STONE DUST TRAIL
- PROPOSED MILLINGS PARKING
- PROPOSED CONTOUR
- PROPOSED INDEX CONTOUR
- PROPOSED TREE CLEAR LINE
- TURF REINFORCEMENT MAT
- INFILTRATION BASIN SEEDING
- SOIL AMENDMENT
- IRRIGATION TANK WATER TRANSFER LINE
- 2" DIP WATER
- ELECTRIC
- STORM SEWER
- SANITARY SEWER
- RIP-RAP APRON

CONSTRUCTION NOTES

1. TITLE BOUNDARY AND PARTIAL TOPOGRAPHY PROVIDED BY LANDMARKER GEOSPATIAL, INC., PER FIELD SURVEY MAY OF 2011. SUPPLEMENTAL TOPOGRAPHY PROVIDED VIA PAMAP LiDAR.

2. PURSUANT TO THE FEDERAL EMERGENCY MANAGEMENT AGENCY (FEMA) MAP 42091C0266 E, EFFECTIVE DATE DECEMBER 19 1996 NUMBER 420713 PANEL 0266, SUFFIX E, 100 YEAR FLOOD LIMITS ARE CONTAINED WITHIN THE SUBJECT TRACTS.

3. A WETLANDS EVALUATION UTILIZING STANDARD PROCEDURES DEVELOPED BY THE U.S. ARMY CORPS OF ENGINEERS DELINEATION MANUAL, (JANUARY 1987, AS AMENDED) WAS PERFORMED IN MARCH 2011, BY GREAT VALLEY ENVIRONMENTAL, INC. PORTIONS OF THE SITE ARE CLASSIFIED AS WETLANDS AND REGULATED WATERS OF THE UNITED STATES.

4. ALL CONSTRUCTION SHALL BE PERFORMED IN ACCORDANCE WITH PADOT SPECIFICATIONS, PUBLICATION 408/90 AND TO WHITPAIN TOWNSHIP STANDARDS.

5. ALL UTILITY LOCATIONS DEPICTED HEREON ARE APPROXIMATE, CONTRACTOR IS RESPONSIBLE FOR LOCATION VERIFICATION PRIOR TO COMMENCEMENT OF ANY WORK.

6. PERMITS SHALL BE OBTAINED FROM WHITPAIN TOWNSHIP PRIOR TO THE COMMENCEMENT OF ANY CONSTRUCTION.

7. THE CONTRACTOR SHALL NOTIFY THE DESIGN ENGINEER PRIOR TO THE CONSTRUCTION OF THE BIO-RETENTION FACILITY AS IT IS A CRITICAL STAGE OF THE IMPLEMENTATION OF THE POST CONSTRUCTION STORMWATER MANAGEMENT PLAN. IN ADDITION, IN ACCORDANCE WITH 102.8(F)(7) AND 102.8(K), THE PERMITTEE SHALL PROVIDE THE CONSERVATION DISTRICT WITH A SCHEDULE OF INSPECTIONS FOR CRITICAL STAGES OF PCSM BMP INSTALLATION, INCLUDING SOIL AMENDMENTS, AND ENSURE THAT A LICENSED PROFESSIONAL PROVIDES OVERSIGHT OF THOSE CRITICAL STAGES. NOTIFICATION OF PCSM BMP INSTALLATION, PARTICULARLY SOIL AMENDMENT INSTALLATION, SHALL BE GIVEN TO THE MONTGOMERY COUNTY CONSERVATION DISTRICT SEVEN DAYS PRIOR TO COMMENCEMENT.

8. PROPOSED CONNECTIONS TO EXISTING STORM AND SANITARY SEWER HAVE BEEN BASED UPON BEST AVAILABLE SURVEY DATA. CONTRACTOR SHALL VERIFY EXISTING STORM AND SANITARY SEWER INVERTS, RIMS, AND TOP OF GRATE ELEVATIONS AT ALL PROPOSED CONNECTION POINTS PRIOR TO ANY AND ALL CONSTRUCTION.

9. PROPOSED CURB ELEVATIONS SPECIFIED HEREON ARE FINISH GRADE GUTTER LINE ELEVATIONS. ALL PROPOSED ELEVATIONS HAVE BEEN CALCULATED UTILIZING BEST AVAILABLE SURVEY DATA OF EXISTING CENTERLINE AND EDGE OF CARTWAY ELEVATION SHOTS AT THE TIME OF DESIGN. CONTRACTOR SHALL VERIFY EXISTING CENTERLINE AND EDGE OF CARTWAY ELEVATION SHOTS PRIOR TO ANY AND ALL CONSTRUCTION.

10. BENCHMARK: EXISTING CONCRETE MONUMENT, ELEVATION= 262.92

11. WHEREVER PHYSICAL LIMITATIONS RESULT IN NOT SATISFYING THE REQUIRED 18 INCH MINIMUM CLEARANCE BETWEEN PUBLIC WATER FACILITIES AND ANY OTHER UTILITY (i.e. STORM, SANITARY, ETC.), 6" THICK FULL CONCRETE ENCASEMENT SHALL BE PROVIDED AS FOLLOWS:

a) FOR CONFLICTS BETWEEN WATER AND SANITARY SEWER, INCLUDING LATERALS AND SERVICES, THE SANITARY SEWER SHALL BE ENCASED FOR A MINIMUM DISTANCE OF TEN (10) FEET ON BOTH SIDES OF THE WATER LINE.

b) FOR CONFLICTS BETWEEN WATER AND STORM SEWER, INCLUDING SERVICES, THE WATER LINE SHALL BE ENCASED FOR A MINIMUM DISTANCE ON TEN (10) FEET OF BOTH SIDES OF THE STORM SEWER.

c) FOR CONFLICTS BETWEEN SANITARY SEWER AND STORM SEWER, INCLUDING LATERALS, THE SANITARY LINE SHALL BE ENCASED FOR A MINIMUM DISTANCE ON TEN (10) FEET OF BOTH SIDES OF THE STORM SEWER.

12. AN 18 INCH VERTICAL CLEARANCE OR A 10 FOOT HORIZONTAL CLEARANCE SHALL BE MAINTAINED BETWEEN ALL SANITARY SEWER AND WATER LINES, INCLUDING LATERALS AND SERVICES WHERE POSSIBLE TO MAINTAIN HORIZONTAL CLEARANCE, AN 18 INCH VERTICAL CLEARANCE MUST BE MAINTAINED AND SANITARY AND WATER LINES MUST BE CONSTRUCTED IN SEPARATE OR BENCHED TRENCHES.

13. TOP OF GRATE AND RIM ELEVATIONS SPECIFIED HEREON ARE FROM CENTER OF STRUCTURE. CONTRACTOR IS RESPONSIBLE FOR PROJECTING THE ROADWAY/PARKING GRADE ALONG THE LENGTH OF THE STRUCTURE.

14. SPOT ELEVATIONS AT FACE OF CURB REPRESENT FINISH GRADE AT BOTTOM OF CURB FACE REVEAL.

15. ANY AND ALL FILL SHALL BE PLACED PER THE RECOMMENDATIONS OF THE GEO-TECHNICAL CONSULTANT.

16. ALL PROPOSED HDPEP SHALL BE SMOOTH BORE INTERIOR. THERMO-PLASTIC PIPE CAN BE SUBSTITUTED WITH THE APPROVAL OF WHITPAIN TOWNSHIP.

17. ALL INLETS GRATES SHALL BE PEDESTRIAN SAFE STRUCTURAL STEEL.

18. PAVEMENT AND STONE SUBBASE SHALL BE PLACED ON A PREPARED SUBGRADE, FREE OF SOFT, MUDDY, OR FROZEN AREAS. SUCH UNSATISFACTORY SOFT AREAS SHALL BE CORRECTED BY SCARIFYING, RESHAPING, AND RE-COMPACTING EXISTING MATERIAL, OR BY REPLACING SOFT MATERIAL WITH STABLE, SUITABLE MATERIAL. UNSATISFACTORY MATERIAL SHALL BE REPLACED WHEN DIRECTED BY THE TOWNSHIP ENGINEER. IT SHALL BE THE RESPONSIBILITY OF THE CONTRACTOR TO VERIFY REQUIRED STABILITY OF SUBGRADE THROUGH COMPACTION TESTING SUITABLE TO THE TOWNSHIP ENGINEER. PRIOR TO PLACEMENT OF THE WEARING COURSE, A TACK COAT CONFORMING TO PUBLICATION 408, SECTION 460.3, SHALL BE APPLIED TO THE BITUMINOUS BASE COURSE (OR BINDER COURSE, WHERE APPROVED) WHEN DIRECTED BY THE TOWNSHIP ENGINEER.

19. WHERE UTILITY INSTALLATION OCCURS, THE EXACT EXTENT OF ROAD MAINTENANCE AND REPAIR SHALL BE DETERMINED BY THE RECOMMENDATION OF THE TOWNSHIP ENGINEER.

20. A TEN (10) FOOT HORIZONTAL SEPARATION SHALL BE MAINTAINED BETWEEN THE PROPOSED SEWER (INCLUDING LATERALS) AND ALL LANDSCAPING.

21. A TEN (10) FOOT HORIZONTAL SEPARATION SHALL BE MAINTAINED BETWEEN THE PROPOSED WATER FACILITIES (INCLUDING SERVICES) AND ALL LANDSCAPING.

22. A MINIMUM SLOPE OF 2% SHALL BE PROVIDED FOR SEWER LATERALS.

23. THE WATER AND SANITARY SEWER SYSTEMS SHALL BE INSTALLED IN ACCORDANCE WITH THE APPLICABLE AUTHORITIES AND WHITPAIN TOWNSHIP STANDARDS, RESPECTIVELY.

24. SANITARY SEWER AND WATER SERVICE LINES SHALL MAINTAIN A MINIMUM COVER OF 3 1/2'.

25. ALL TOP SOIL AND FILL MATERIAL IMPORTED TO THIS SITE BY THE CONTRACTOR OR HIS SUBCONTRACTOR(S) SHALL STRICTLY COMPLY WITH THE REQUIREMENTS OF THE DEP "CLEAN FILL POLICY" WHICH ARE IN EFFECT AT THE TIME OF THE FILL IMPORT. NO TOPSOIL SHALL BE REMOVED FROM THIS SITE EXCEPT FOR PROVIDING SOIL AMENDMENTS.

26. THE CONTRACTOR SHALL HAVE A PREPAREDNESS PREVENTION AND CONTINGENCY (PPC) PLAN ON SITE AT ALL TIMES.

28. STORM AND SANITARY SEWER LENGTHS AND SLOPES ARE MEASURED FROM CENTER OF STRUCTURE TO CENTER OF STRUCTURE.

29. WHITPAIN TOWNSHIP SHALL OWN AND MAINTAIN THE FIELDS, PARKING LOT, ROADS, AND ALL ASSOCIATED STORMWATER MANAGEMENT FACILITIES.

SOILS DATA

DATA OBTAINED FROM SOIL SURVEY OF MONTGOMERY COUNTY, PENNSYLVANIA, ISSUED APRIL 1967.

- AbA – ABBOTTSTOWN SILT LOAM, 0 TO 3 PERCENT SLOPES; HSG C
- Bp – BOWMANSVILLE SILT LOAM; HSG B/D
- CfA – CHALFONT SILT LOAM, 0 TO 3 PERCENT SLOPES; HSG C
- DsA – DOYLESTOWN SILT LOAM, 0 TO 3 PERCENT SLOPES; HSG D
- LaB3 – LANSDALE SILT LOAM, THIN, 3 TO 8 PERCENT SLOPES; HSG B
- LdB2 – LANSDALE SILT LOAM, 3 TO 8 PERCENT SLOPES, HSG B
- MeB – MADE LAND, SHALE AND SANDSTONE MATERIALS, SLOPING
- ReA – READINGTON SILT LOAM, 0 TO 3 PERCENT SLOPES; HSG C
- ReB2 – READINGTON SILT LOAM, 3 TO 8 PERCENT SLOPES; HSG C

PENNSYLVANIA ONE CALL SYSTEM, INC. 1-800-242-1776 STOP – CALL BEFORE YOU DIG

LOCATIONS OF ALL EXISTING UTILITIES SHOWN HEREON HAVE BEEN DEVELOPED FROM UTILITY COMPANY RECORDS AND/OR ABOVE-GROUND INSPECTION OF THE SITE. COMPLETENESS OR ACCURACY OF TYPE, SIZE, DEPTH OR HORIZONTAL LOCATION OF UNDERGROUND FACILITIES OR STRUCTURES CANNOT BE GUARANTEED. PURSUANT TO REQUIREMENTS OF THE PENNSYLVANIA LEGISLATIVE ACT NUMBER 38, CONTRACTORS MUST VERIFY LOCATION AND DEPTH OF ALL UNDERGROUND UTILITIES AND FACILITIES PRIOR TO START OF WORK. SERIAL NUMBER 20110671016.

HIBBELN ENGINEERING COMPANY, L.L.C.
CONSULTING ENGINEERS
215·619·9070 PA, NJ, MD & DE
593 Skippack Pike, Suite 300
Blue Bell, Pennsylvania 19422
www.hibbelnengineering.com
IN CONJUNCTION WITH:
LandConcepts
593 Skippack Pike • Suite 300 • Blue Bell, PA 19422

COOK TRACT ATHLETIC FIELDS

PREPARED FOR
WHITPAIN TOWNSHIP
SITE SITUATE IN
WHITPAIN TOWNSHIP
MONTGOMERY COUNTY, PENNSYLVANIA

ALL DOCUMENTS PREPARED BY HIBBELN ENGINEERING COMPANY, L.L.C. ARE INSTRUMENTS OF SERVICE IN RESPECT OF THE PROJECT. THEY ARE NOT INTENDED OR REPRESENTED TO BE SUITABLE FOR REUSE BY OWNER OR OTHERS ON EXTENSIONS OF THE PROJECT OR ON ANY OTHER PROJECT. ANY REUSE WITHOUT WRITTEN VERIFICATION OR ADAPTATION BY HIBBELN ENGINEERING COMPANY, L.L.C. FOR THE SPECIFIC PURPOSE INTENDED WILL BE AT OWNERS SOLE RISK AND WITHOUT LIABILITY OR LEGAL EXPOSURE TO HIBBELN ENGINEERING COMPANY, L.L.C.; AND OWNER SHALL INDEMNIFY AND HOLD HARMLESS HIBBELN ENGINEERING COMPANY, L.L.C. FROM ALL CLAIMS, DAMAGES, LOSSES AND EXPENSES ARISING OUT OF OR RESULTING THEREFROM.

NO.	REVISIONS	
6	PER ADDITION OF SEDIMENT BASIN B PHASE 4 PLAN	JUNE 18, 2012
5	PER MCCD LETTER (2-9-12)	FEBRUARY 10, 2012
4	PER STORM SYTEM 'B'	JANUARY 31, 2012
3	PER MCCD LETTER (1/3/12)	JANUARY 5, 2012
2	PER SANITARY SEWER RELOCATION	DECEMBER 19, 2011
1	100% COMPLETION PLAN	NOVEMBER 22, 2011
	PLAN ORIGINATION DATE	AUGUST 26, 2011

HIBBELN ENGINEERING COMPANY, L.L.C. CONSULTING ENGINEERS

OVERALL PCSM GRADING PLAN

COOK TRACT ATHLETIC FIELDS
SITE SITUATE IN
WHITPAIN TOWNSHIP
MONTGOMERY COUNTY, PENNSYLVANIA

PROJECT MANAGER:	DRAFTED BY:
DSC/AJH	JBS
PROJECT NUMBER: 12460	DRAWING FILE: #12460_SHT08-12
PLAN SCALE: 1" = 100'	PLAN SHEET NUMBER 8 OF 38

GRAPHIC SCALE: 0' 50' 100' 200'

BIO-RETENTION AREA #3 @ ELEV. 263. AREA = 800 S.F. (SEE DETAIL & SEEDING SPECIFICATIONS)

BIO-RETENTION AREA #1 @ ELEV. 263. AREA = 800 S.F. (SEE DETAIL & SEEDING SPECIFICATIONS)

FIELD 5 SOIL AMENDMENT AREA = 36,000 S.F. (SEE SOIL AMENDMENT SPECIFICATIONS)

SOIL AMENDMENT AREA = 200,500 S.F. (SEE SOIL AMENDMENT SPECIFICATIONS)

FIELD '1'

BIO-RETENTION AREA #4 @ ELEV. 263. AREA = 800 S.F. (SEE DETAIL & SEEDING SPECIFICATIONS)

BIO-RETENTION AREA #2 @ ELEV. 263. AREA = 800 S.F. (SEE DETAIL & SEEDING SPECIFICATIONS)

INFILTRATION AREA 'A1' @ ELEV. 242. AREA = 2,850 S.F. (SEE LANDSCAPE PLAN FOR SEEDING SPECIFICATIONS)

FIELD 1 SOIL AMENDMENT AREA = 64,350 S.F. (SEE SOIL AMENDMENT SPECIFICATIONS)

FIELD 6 SOIL AMENDMENT AREA = 25,200 S.F. (SEE SOIL AMENDMENT SPECIFICATIONS)

FIELD '6'

DRIVE 'A'

DRIVE 'B'

100-YEAR FLOODPLAIN

INFILTRATION AREA 'A1' @ ELEV. 242. AREA = 27,326 S.F. (SEE LANDSCAPE PLAN FOR SEEDING SPECIFICATIONS)

BASIN A1

BASIN-A1 EMERGENCY SPILLWAY. SEE CROSS SECTION

36" TREE

36" PIPE

WETLANDS

WOODED AREA

WETLAND FLAGS:
Twlb1 to Twlb19
Twlb25 to Twlb28
Twlb32 to Twlb40
Twlb56 to Twlb59
Twlb70 to Twlb75

REGULATED WOUS FLAGS:
Twlb19 to Twlb25
Twlb28 to Twlb32
Twlb40 to Twlb56
Twlb59 to Twlb70

GULF TRIPLE 30"S A REGULATED WATERS OF THE UNITED STATES @ 0.0117

P-R PARK AND RECREATION DISTRICT

R-1 RESIDENTIAL DISTRICT

R2 RESIDENTIAL DISTRICT

LEGEND

- SOILS LINE
- EXISTING CONTOUR
- EXISTING INDEX CONTOUR
- EXISTING TREE CANOPY
- INFILTRATION TEST LOCATION
- EXISTING WETLANDS
- PROPOSED PAVEMENT
- PROPOSED 8' WIDE 2"TH STONE DUST ON 4"TH MIN. MILLINGS TRAIL
- PROPOSED 6"TH MILLINGS PARKING AREA
- PROPOSED CONTOUR
- PROPOSED INDEX CONTOUR
- PROPOSED TREE CLEAR LINE
- TURF REINFORCEMENT MAT
- INFILTRATION BASIN SEEDING
- SOIL AMENDMENT
- IRRIGATION TANK WATER TRANSFER LINE
- WATER
- ELECTRIC
- STORM SEWER
- SANITARY SEWER
- RIP-RAP APRON

SHEET KEY MAP

HIBBELN ENGINEERING COMPANY, L.L.C.
CONSULTING ENGINEERS
215-619-9070 PA, NJ, MD & DE
593 Skippack Pike, Suite 300
Blue Bell, Pennsylvania 19422
www.hibbelnengineering.com
IN CONJUNCTION WITH:
LandConcepts
593 Skippack Pike • Suite 300 • Blue Bell, PA 19422

COOK TRACT ATHLETIC FIELDS

PREPARED FOR
WHITPAIN TOWNSHIP

SITE SITUATE IN
WHITPAIN TOWNSHIP
MONTGOMERY COUNTY, PENNSYLVANIA

NO.	REVISIONS	PLAN ORIGINATION DATE
1	100% COMPLETION PLAN	AUGUST 26, 2011
2	PER MCCD LETTER (12-9-11)	NOVEMBER 22, 2011
3	PER MCCD LETTER (1-27-12)	JANUARY 5, 2012
4	PER SOUTH WHITPAIN TWP. REVISION	JANUARY 31, 2012
5	PER MCCD LETTER (2-9-12)	FEBRUARY 10, 2012
6	PER ADDITION OF SEDIMENT BASIN 6/ PHASE 4 PLAN	JUNE 18, 2012

THE DRAWINGS PRESENT A VISUAL REPRESENTATION OF THE DESIGN OF THE PROJECT. THE WORK SHALL BE PERFORMED IN ACCORDANCE WITH THE CONTRACT DOCUMENTS, WHICH INCLUDE, BUT ARE NOT LIMITED TO, THE PROJECT MANUAL, ADDENDA, AND CHANGE ORDERS. THE DRAWINGS ARE THE PROPERTY OF HIBBELN ENGINEERING COMPANY, L.L.C. AND SHALL NOT BE USED, REPRODUCED OR TRANSMITTED IN ANY FORM OR BY ANY MEANS, ELECTRONIC OR MECHANICAL, INCLUDING PHOTOCOPYING, RECORDING, OR BY ANY INFORMATION STORAGE AND RETRIEVAL SYSTEM, WITHOUT THE PRIOR WRITTEN PERMISSION OF HIBBELN ENGINEERING COMPANY, L.L.C.

HIBBELN ENGINEERING COMPANY, L.L.C.
CONSULTING ENGINEERS

PCSM, GRADING & DRAINAGE PLAN 'A'

COOK TRACT ATHLETIC FIELDS

SITE SITUATE IN
WHITPAIN TOWNSHIP
MONTGOMERY COUNTY, PENNSYLVANIA

PROJECT MANAGER: DSC/AJH	DRAFTED BY: JBB
PROJECT NUMBER: 12460	DRAWING FILE: #12460_SHT08-12
PLAN SCALE: 1" = 50'	PLAN SHEET NUMBER 9 OF 38

0' 25' 50' 100'
GRAPHIC SCALE

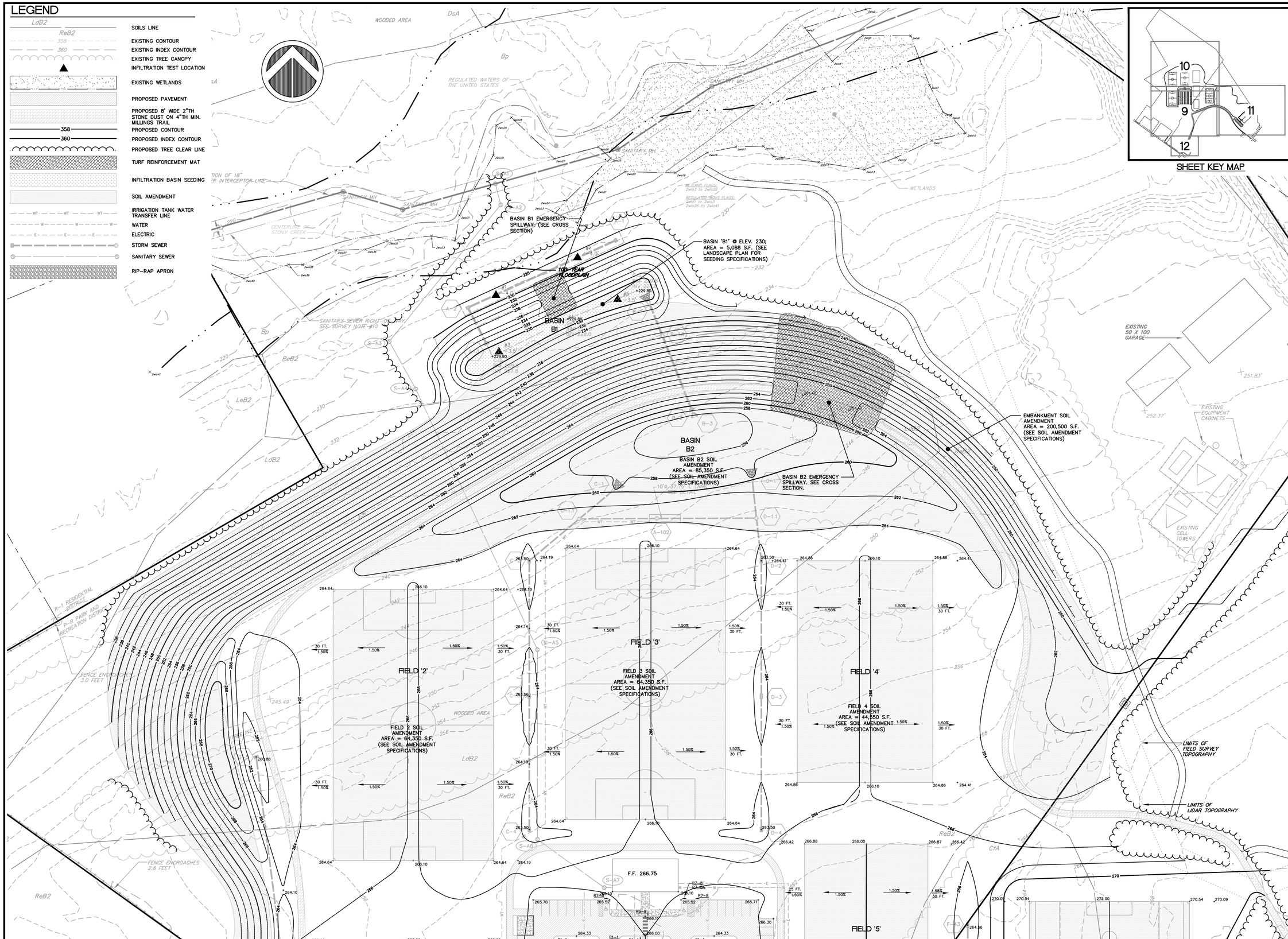

HIBBELN ENGINEERING COMPANY, L.L.C.
CONSULTING ENGINEERS
215-619-9070 PA, NJ, MD & DE
593 Skippack Pike, Suite 300
Blue Bell, Pennsylvania 19422
www.hibbelnengineering.com
IN CONJUNCTION WITH:
LandConcepts
593 Skippack Pike • Suite 300 • Blue Bell, PA 19422

COOK TRACT ATHLETIC FIELDS

PREPARED FOR
WHITPAIN TOWNSHIP
SITE SITUATE IN
WHITPAIN TOWNSHIP
MONTGOMERY COUNTY, PENNSYLVANIA

NO.	REVISIONS	DATE
6	PER ADDITION OF SEDIMENT BASIN B PHASE 4 PLAN	JUNE 18, 2012
5	PER MCCD LETTER (2-9-12)	FEBRUARY 10, 2012
4	PER STORM SYSTEM 'B'	JANUARY 31, 2012
3	PER MCCD LETTER (1/3/12)	JANUARY 5, 2012
2	PER SANITARY SEWER RELOCATION	DECEMBER 19, 2011
1	100% COMPLETION PLAN	NOVEMBER 22, 2011
	PLAN ORIGINATION DATE	AUGUST 26, 2011

HIBBELN ENGINEERING COMPANY, L.L.C.
CONSULTING ENGINEERS

PCSM, GRADING & DRAINAGE PLAN 'B'

COOK TRACT
ATHLETIC FIELDS
SITE SITUATE IN
WHITPAIN TOWNSHIP
MONTGOMERY COUNTY, PENNSYLVANIA

PROJECT MANAGER: DSC/AJH	DRAFTED BY: JBS
PROJECT NUMBER: 12460	DRAWING FILE: #12460_SHT08-12
PLAN SCALE: 1" = 50'	PLAN SHEET NUMBER 10 OF 38

0' 25' 50' 100'
GRAPHIC SCALE

FIELD '7' SOIL AMENDMENT AREA = 64,350 S.F. (SEE SOIL AMENDMENT SPECIFICATIONS)

FIELD '7'

BASIN A2

INFILTRATION AREA 'A2' @ ELEV. 262, AREA = 9,023 S.F. (SEE LANDSCAPE PLAN FOR SEEDING SPECIFICATIONS)

SWALE #4

SWALE #3

SWALE #2

SWALE #1

BASIN 'A2' EMERGENCY SPILLWAY. SEE CROSS SECTION

RESERVE FIELD '8' AND DOG RUNS

DRIVE 'B'

3+51.44

PA TURNPIKE EXTENSION NORTHEAST - 476

DEKALB PIKE (S.R. 0202)

ST. HELENA CHURCH STORMWATER MANAGEMENT BASIN

TEMPORARY CONSTRUCTION EASEMENT

50' WIDE ACCESS EASEMENT

ULTIMATE RIGHT-OF-WAY

LEGAL RIGHT-OF-WAY

CONCRETE CURB

WETLANDS

WATERS OF STATES

LIMITS OF LIDAR TOPOGRAPHY

SHEET KEY MAP

10
9
11
12

LEGEND

- SOILS LINE
- EXISTING CONTOUR
- EXISTING INDEX CONTOUR
- EXISTING TREE CANOPY
- INFILTRATION TEST LOCATION
- EXISTING WETLANDS
- PROPOSED PAVEMENT
- PROPOSED 8' WIDE 2"TH STONE DUST ON 4"TH MIN. MILLINGS TRAIL
- PROPOSED 6"TH MILLINGS PARKING AREA
- PROPOSED CONTOUR
- PROPOSED INDEX CONTOUR
- PROPOSED TREE CLEAR LINE
- TURF REINFORCEMENT MAT
- INFILTRATION BASIN SEEDING
- SOIL AMENDMENT
- IRRIGATION TANK WATER TRANSFER LINE
- WATER
- ELECTRIC
- STORM SEWER
- SANITARY SEWER
- RIP-RAP APRON

HIBBELN ENGINEERING COMPANY, L.L.C.
CONSULTING ENGINEERS
215-619-9070 PA, NJ, MD & DE
593 Skippack Pike, Suite 300
Blue Bell, Pennsylvania 19422
www.hibbelnengineering.com
IN CONJUNCTION WITH:
Land Concepts
593 Skippack Pike • Suite 300 • Blue Bell, PA 19422

COOK TRACT ATHLETIC FIELDS

PREPARED FOR
WHITPAIN TOWNSHIP

SITE SITUATE IN
WHITPAIN TOWNSHIP
MONTGOMERY COUNTY, PENNSYLVANIA

NO.	REVISIONS	PLAN ORIGINATION DATE
1	100% COMPLETION PLAN	AUGUST 26, 2011
2	PER MCCD REVIEW LETTER	NOVEMBER 22, 2011
3	PER MCCD LETTER (1/27/12)	JANUARY 5, 2012
4	PER STORM SYSTEM 'B'	JANUARY 31, 2012
5	PER MCCD LETTER (2-9-12)	FEBRUARY 10, 2012
6	PER ADDITION OF SEDIMENT BASIN 8 PHASE 4 PLAN	MAR. 16, 2012

I'D LEONARD BOYLE & SONS, INC. ENGINEERS & SURVEYORS OF PLYMOUTH MEETING, PA. AND ARE RESPONSIBLE FOR THE SURVEY SHOWN ON THIS PLAN. THE SURVEY WAS PERFORMED BY ME OR UNDER MY SUPERVISION AND ALL INFORMATION IS CORRECT TO THE BEST OF MY KNOWLEDGE AND BELIEF. THE SURVEY WAS PERFORMED IN THE FIELD ON (DATE) AND ALL MONUMENTS SHOWN HEREON EXIST AS SHOWN AND ARE SUFFICIENT TO ENABLE THE SURVEY TO BE RETRACED.

HIBBELN ENGINEERING COMPANY, L.L.C.
CONSULTING ENGINEERS

PCSM, GRADING & DRAINAGE PLAN 'C'

COOK TRACT
ATHLETIC FIELDS
SITE SITUATE IN
WHITPAIN TOWNSHIP
MONTGOMERY COUNTY, PENNSYLVANIA

PROJECT MANAGER:	DRAFTED BY:
DSC/AJH	JBS
PROJECT NUMBER:	DRAWING FILE:
12460	#12460_SHT08-12
PLAN SCALE:	PLAN SHEET NUMBER
1" = 50'	11 OF 38

0' 25' 50' 100'
GRAPHIC SCALE

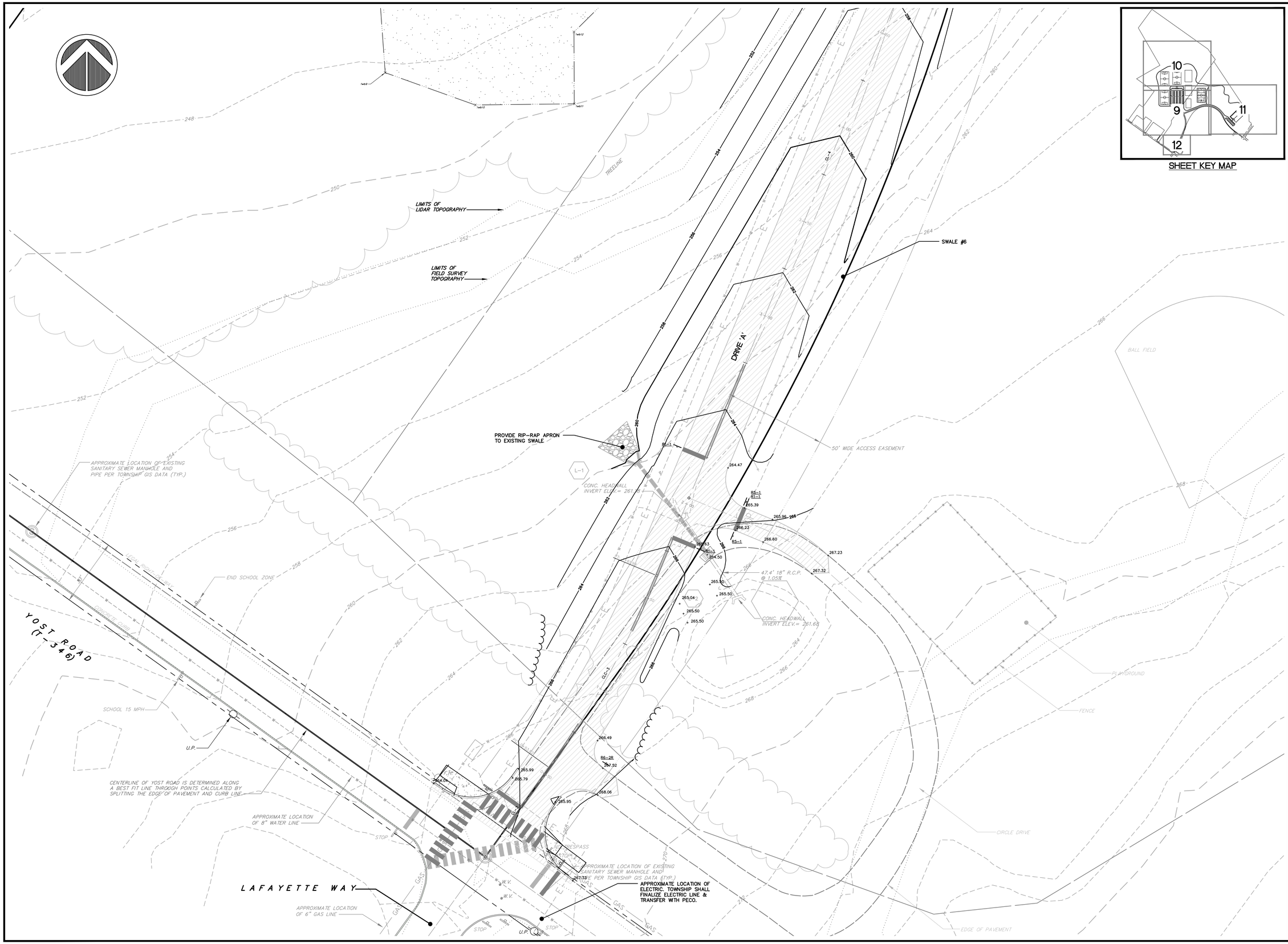

SHEET KEY MAP

HIBBELN ENGINEERING COMPANY, L.L.C.
CONSULTING ENGINEERS
215-619-9070 PA, NJ, MD & DE
593 Skippack Pike, Suite 300
Blue Bell, Pennsylvania 19422
www.hibbelnengineering.com
IN CONJUNCTION WITH:
LandConcepts
593 Skippack Pike • Suite 300 • Blue Bell, PA 19422

COOK TRACT ATHLETIC FIELDS

PREPARED FOR
WHITPAIN TOWNSHIP

SITE SITUATE IN
WHITPAIN TOWNSHIP
MONTGOMERY COUNTY, PENNSYLVANIA

NO.	REVISIONS	DATE
6	PER ADDITION OF SEDIMENT BASIN B PHASE 4 PLAN	JUNE 18, 2012
5	PER MCCD LETTER (2-9-12)	FEBRUARY 10, 2012
4	PER STORM SYSTEM 'B'	JANUARY 31, 2012
3	PER MCCD LETTER (1/3/12)	JANUARY 5, 2012
2	PER SANITARY SEWER RELOCATION	DECEMBER 19, 2011
1	100% COMPLETION PLAN	NOVEMBER 22, 2011
	PLAN ORIGINATION DATE	AUGUST 26, 2011

HIBBELN ENGINEERING COMPANY, L.L.C.
CONSULTING ENGINEERS

PCSM, GRADING & DRAINAGE PLAN 'D'

COOK TRACT
ATHLETIC FIELDS
SITE SITUATE IN
WHITPAIN TOWNSHIP
MONTGOMERY COUNTY, PENNSYLVANIA

PROJECT MANAGER: DSC/AJH	DRAFTED BY: JBS
PROJECT NUMBER: 12460	DRAWING FILE: #12460_SHT08-12
PLAN SCALE: 1" = 20'	PLAN SHEET NUMBER 12 OF 38

0' 10' 20' 40'
GRAPHIC SCALE

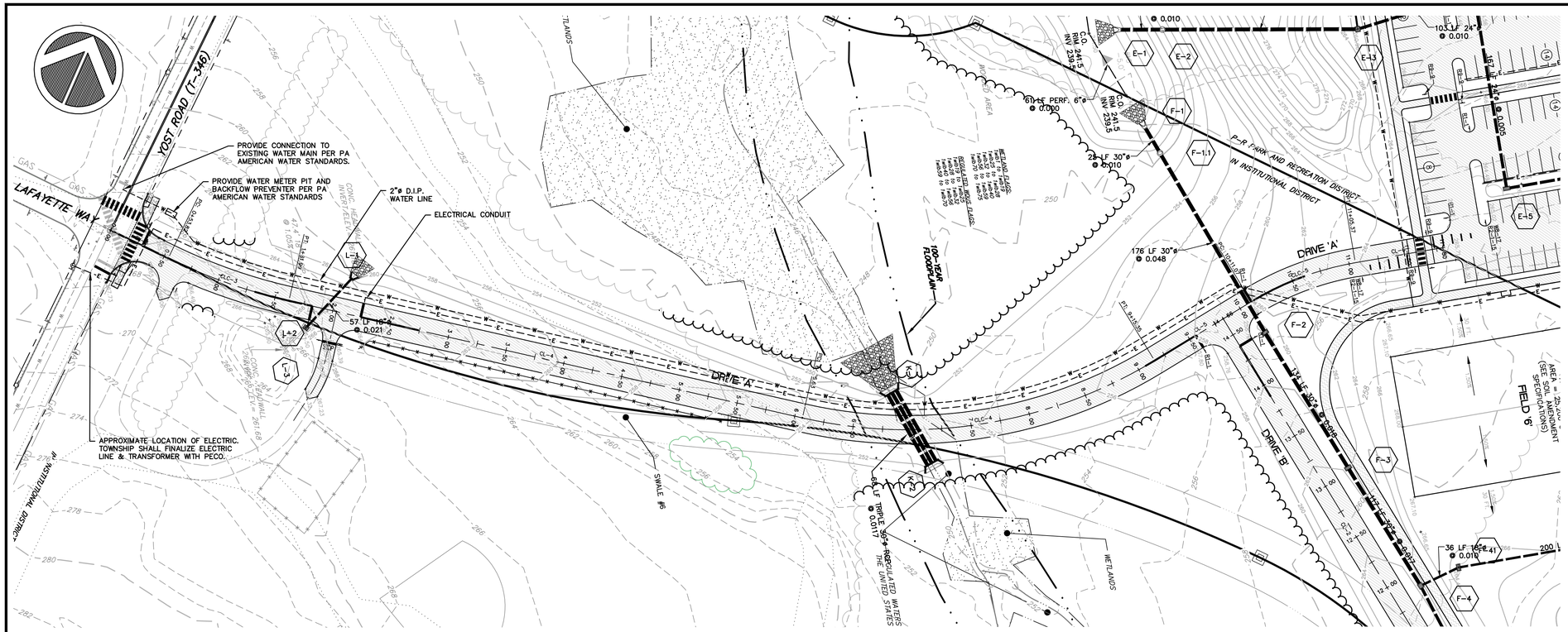

LEGEND

- EXISTING CONTOUR
- EXISTING INDEX CONTOUR
- EXISTING TREE CANOPY
- INFILTRATION TEST LOCATION
- EXISTING WETLANDS
- PROPOSED PAVEMENT
- PROPOSED 8' WIDE 2"TH STONE DUST ON 4"TH MIN. MILLINGS TRAIL
- PROPOSED 6"TH MILLINGS PARKING AREA
- PROPOSED CONTOUR
- PROPOSED INDEX CONTOUR
- PROPOSED TREE CLEAR LINE
- TURF REINFORCEMENT MAT
- INFILTRATION BASIN SEEDING
- SOIL AMENDMENT
- IRRIGATION TANK WATER TRANSFER LINE
- WATER
- ELECTRIC
- STORM SEWER
- SANITARY SEWER
- RIP-RAP APRON

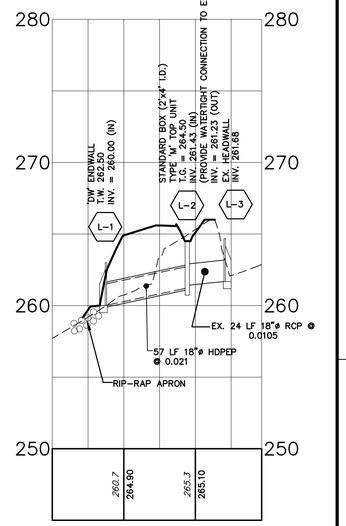

STORM SEWER PROFILE L-1 TO L-3

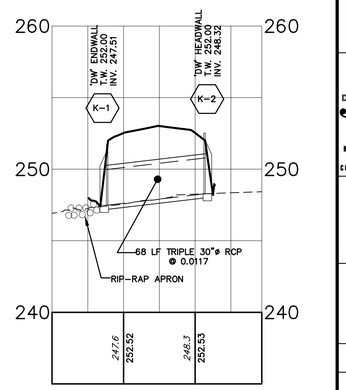

STORM SEWER PROFILE K-1 TO K-2

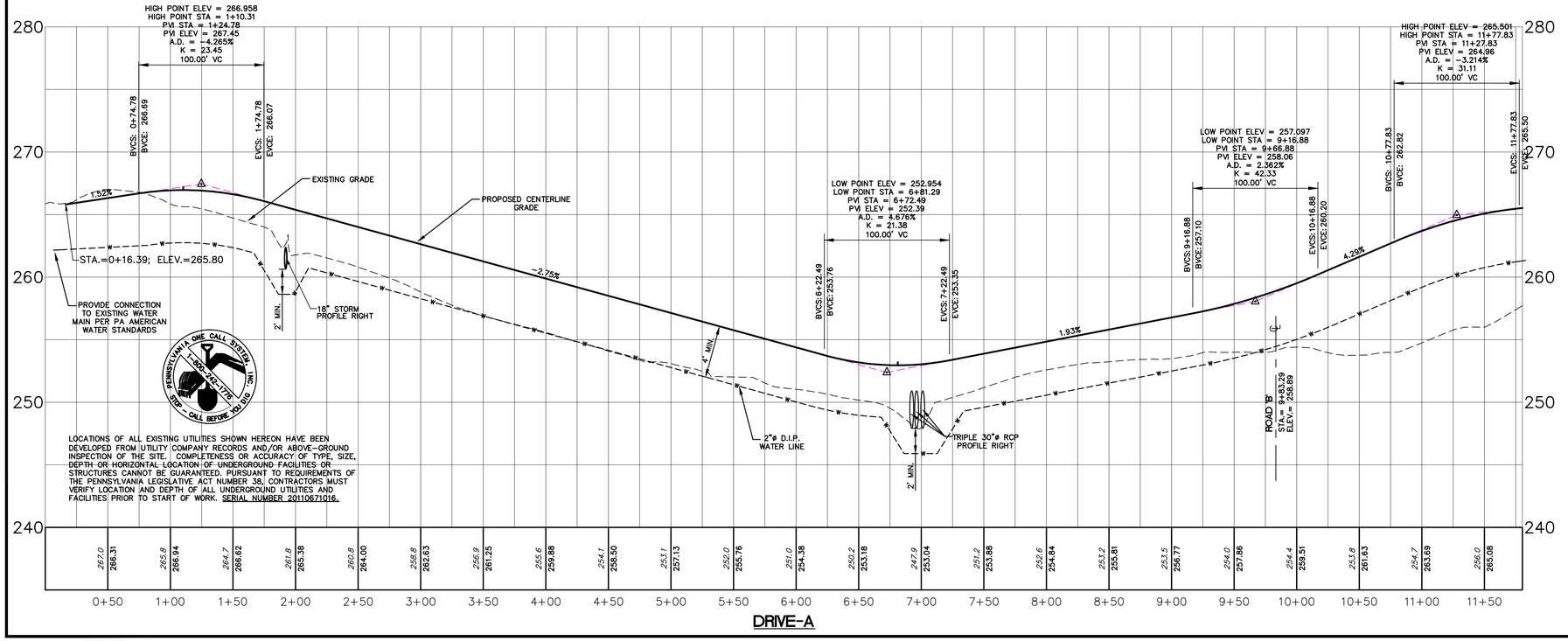

DRIVE-A

HIBBELN ENGINEERING COMPANY, L.L.C.
CONSULTING ENGINEERS
215-619-9070 PA, NJ, MD & DE
593 Skippack Pike, Suite 300
Blue Bell, Pennsylvania 19422
www.hibbelnengineering.com
IN CONJUNCTION WITH:
Land Concepts
593 Skippack Pike • Suite 300 • Blue Bell, PA 19422

COOK TRACT ATHLETIC FIELDS

PREPARED FOR
WHITPAIN TOWNSHIP

SITE SITUATE IN
WHITPAIN TOWNSHIP
MONTGOMERY COUNTY, PENNSYLVANIA

NO.	REVISIONS	DATE
1	100% COMPLETION PLAN	AUGUST 26, 2011
2	PER MCCD LETTER (7-27-12) & SITE LOCATION	NOVEMBER 22, 2011
3	PER MCCD LETTER (12-21-12)	JANUARY 5, 2012
4	PER STORM SYSTEM 'B'	JANUARY 31, 2012
5	PER MCCD LETTER (2-9-12)	FEBRUARY 10, 2012
6	PER ADDITION OF SEDIMENT BASIN 6 PHASE 4 PLAN	JUNE 18, 2012

THE ARCHITECT/ENGINEER'S INSTRUMENTS OF SERVICE, INCLUDING BUT NOT LIMITED TO THESE DRAWINGS, SPECIFICATIONS AND COMPUTER SOFTWARE, ARE AND SHALL REMAIN THE PROPERTY OF THE ARCHITECT/ENGINEER. THESE DOCUMENTS ARE NOT TO BE USED BY THE OWNER OR ANY OTHER PERSON OR ENTITY ON ANY EXTENSION OF THE PROJECT, OR ON ANY OTHER PROJECT, WITHOUT THE WRITTEN CONSENT OF HIBBELN ENGINEERING COMPANY, L.L.C. FIRM.

HIBBELN ENGINEERING COMPANY, L.L.C.
CONSULTING ENGINEERS

DRIVE 'A' PLAN AND PROFILE

COOK TRACT ATHLETIC FIELDS
SITE SITUATE IN
WHITPAIN TOWNSHIP
MONTGOMERY COUNTY, PENNSYLVANIA

PROJECT MANAGER:	DRAFTED BY:
DSC/AJH	JBS
PROJECT NUMBER:	DRAWING FILE:
12460	#12460_SHT13-21
PLAN SCALE: HORIZ.: 1" = 50' VERT.: 1" = 5'	PLAN SHEET NUMBER 13 OF 38

0' 25' 50' 100'
GRAPHIC SCALE

CONSTRUCTION NOTES

1. TITLE BOUNDARY AND PARTIAL TOPOGRAPHY PROVIDED BY LANDMARKER GEOSPATIAL, INC., PER FIELD SURVEY MAY OF 2011. SUPPLEMENTAL TOPOGRAPHY PROVIDED VIA PAMAP LiDAR.

2. PURSUANT TO THE FEDERAL EMERGENCY MANAGEMENT AGENCY (FEMA) MAP 42091C0266 E, EFFECTIVE DATE DECEMBER 19 1996 NUMBER 420713 PANEL 0266, SUFFIX E, 100 YEAR FLOOD LIMITS ARE CONTAINED WITHIN THE SUBJECT TRACTS.

3. A WETLANDS EVALUATION UTILIZING STANDARD PROCEDURES DEVELOPED BY THE U.S. ARMY CORPS OF ENGINEERS DELINEATION MANUAL, (JANUARY 1987, AS AMENDED) WAS PERFORMED IN MARCH 2011, BY GREAT VALLEY ENVIRONMENTAL, INC. PORTIONS OF THE SITE ARE CLASSIFIED AS WETLANDS AND REGULATED WATERS OF THE UNITED STATES.

4. ALL CONSTRUCTION SHALL BE PERFORMED IN ACCORDANCE WITH PADOT SPECIFICATIONS, PUBLICATION 408/90 AND TO WHITPAIN TOWNSHIP STANDARDS.

5. ALL UTILITY LOCATIONS DEPICTED HEREON ARE APPROXIMATE, CONTRACTOR IS RESPONSIBLE FOR LOCATION VERIFICATION PRIOR TO COMMENCEMENT OF ANY WORK.

6. PERMITS SHALL BE OBTAINED FROM WHITPAIN TOWNSHIP PRIOR TO THE COMMENCEMENT OF ANY CONSTRUCTION.

7. THE CONTRACTOR SHALL NOTIFY THE DESIGN ENGINEER PRIOR TO THE CONSTRUCTION OF THE BIO-RETENTION FACILITY AS IT IS A CRITICAL STAGE OF THE IMPLEMENTATION OF THE POST CONSTRUCTION STORMWATER MANAGEMENT PLAN. IN ADDITION, IN ACCORDANCE WITH 102.8(F)(7) AND 102.8(K), THE PERMITTEE SHALL PROVIDE THE CONSERVATION DISTRICT WITH A SCHEDULE OF INSPECTIONS FOR CRITICAL STAGES OF PCSM BMP INSTALLATION, INCLUDING SOIL AMENDMENTS, AND ENSURE THAT A LICENSED PROFESSIONAL PROVIDES OVERSIGHT OF THOSE CRITICAL STAGES. NOTIFICATION OF PCSM BMP INSTALLATION, PARTICULARLY SOIL AMENDMENT INSTALLATION, SHALL BE GIVEN TO THE MONTGOMERY COUNTY CONSERVATION DISTRICT SEVEN DAYS PRIOR TO COMMENCEMENT.

8. PROPOSED CONNECTIONS TO EXISTING STORM AND SANITARY SEWER HAVE BEEN BASED UPON BEST AVAILABLE SURVEY DATA. CONTRACTOR SHALL VERIFY EXISTING STORM AND SANITARY SEWER INVERTS, RIMS, AND TOP OF GRATE ELEVATIONS AT ALL PROPOSED CONNECTION POINTS PRIOR TO ANY AND ALL CONSTRUCTION.

9. PROPOSED CURB ELEVATIONS SPECIFIED HEREON ARE FINISH GRADE GUTTER LINE ELEVATIONS. ALL PROPOSED ELEVATIONS HAVE BEEN CALCULATED UTILIZING BEST AVAILABLE SURVEY DATA OF EXISTING CENTERLINE AND EDGE OF CARTWAY ELEVATION SHOTS AT THE TIME OF DESIGN. CONTRACTOR SHALL VERIFY EXISTING CENTERLINE AND EDGE OF CARTWAY ELEVATION SHOTS PRIOR TO ANY AND ALL CONSTRUCTION.

10. BENCHMARK: EXISTING CONCRETE MONUMENT, ELEVATION= 262.92

11. WHEREVER PHYSICAL LIMITATIONS RESULT IN NOT SATISFYING THE REQUIRED 18 INCH MINIMUM CLEARANCE BETWEEN PUBLIC WATER FACILITIES AND ANY OTHER UTILITY (i.e. STORM, SANITARY, ETC.), 6" THICK FULL CONCRETE ENCASEMENT SHALL BE PROVIDED AS FOLLOWS:

a) FOR CONFLICTS BETWEEN WATER AND SANITARY SEWER, INCLUDING LATERALS AND SERVICES, THE SANITARY SEWER SHALL BE ENCASED FOR A MINIMUM DISTANCE OF TEN (10) FEET ON BOTH SIDES OF THE WATER LINE.

b) FOR CONFLICTS BETWEEN WATER AND STORM SEWER, INCLUDING SERVICES, THE WATER LINE SHALL BE ENCASED FOR A MINIMUM DISTANCE ON TEN (10) FEET OF BOTH SIDES OF THE STORM SEWER.

c) FOR CONFLICTS BETWEEN SANITARY SEWER AND STORM SEWER, INCLUDING LATERALS, THE SANITARY LINE SHALL BE ENCASED FOR A MINIMUM DISTANCE ON TEN (10) FEET OF BOTH SIDES OF THE STORM SEWER.

12. AN 18 INCH VERTICAL CLEARANCE OR A 10 FOOT HORIZONTAL CLEARANCE SHALL BE MAINTAINED BETWEEN ALL SANITARY SEWER AND WATER LINES, INCLUDING LATERALS AND SERVICES WHERE POSSIBLE TO MAINTAIN HORIZONTAL CLEARANCE, AN 18 INCH VERTICAL CLEARANCE MUST BE MAINTAINED AND SANITARY AND WATER LINES MUST BE CONSTRUCTED IN SEPARATE OR BENCHED TRENCHES.

13. TOP OF GRATE AND RIM ELEVATIONS SPECIFIED HEREON ARE FROM CENTER OF STRUCTURE. CONTRACTOR IS RESPONSIBLE FOR PROJECTING THE ROADWAY/PARKING GRADE ALONG THE LENGTH OF THE STRUCTURE.

14. SPOT ELEVATIONS AT FACE OF CURB REPRESENT FINISH GRADE AT BOTTOM OF CURB FACE REVEAL.

15. ANY AND ALL FILL SHALL BE PLACED PER THE RECOMMENDATIONS OF THE GEO-TECHNICAL CONSULTANT.

16. ALL PROPOSED HDPEP SHALL BE SMOOTH BORE INTERIOR. THERMO-PLASTIC PIPE CAN BE SUBSTITUTED WITH THE APPROVAL OF WHITPAIN TOWNSHIP.

17. ALL INLETS GRATES SHALL BE PEDESTRIAN SAFE STRUCTURAL STEEL.

18. PAVEMENT AND STONE SUBBASE SHALL BE PLACED ON A PREPARED SUBGRADE, FREE OF SOFT, MUDDY, OR FROZEN AREAS. SUCH UNSATISFACTORY SOFT AREAS SHALL BE CORRECTED BY SCARIFYING, RESHAPING, AND RE-COMPACTING EXISTING MATERIAL, OR BY REPLACING SOFT MATERIAL WITH STABLE, SUITABLE MATERIAL. UNSATISFACTORY MATERIAL SHALL BE REPLACED WHEN DIRECTED BY THE TOWNSHIP ENGINEER. IT SHALL BE THE RESPONSIBILITY OF THE CONTRACTOR TO VERIFY REQUIRED STABILITY OF SUBGRADE THROUGH COMPACTION TESTING SUITABLE TO THE TOWNSHIP ENGINEER. PRIOR TO PLACEMENT OF THE WEARING COURSE, A TACK COAT CONFORMING TO PUBLICATION 408, SECTION 460.3, SHALL BE APPLIED TO THE BITUMINOUS BASE COURSE (OR BINDER COURSE, WHERE APPROVED) WHEN DIRECTED BY THE TOWNSHIP ENGINEER.

19. WHERE UTILITY INSTALLATION OCCURS, THE EXACT EXTENT OF ROAD MAINTENANCE AND REPAIR SHALL BE DETERMINED BY THE RECOMMENDATION OF THE TOWNSHIP ENGINEER.

20. A TEN (10) FOOT HORIZONTAL SEPARATION SHALL BE MAINTAINED BETWEEN THE PROPOSED SEWER (INCLUDING LATERALS) AND ALL LANDSCAPING.

21. A TEN (10) FOOT HORIZONTAL SEPARATION SHALL BE MAINTAINED BETWEEN THE PROPOSED WATER FACILITIES (INCLUDING SERVICES) AND ALL LANDSCAPING.

22. A MINIMUM SLOPE OF 2% SHALL BE PROVIDED FOR SEWER LATERALS.

23. THE WATER AND SANITARY SEWER SYSTEMS SHALL BE INSTALLED IN ACCORDANCE WITH THE APPLICABLE AUTHORITIES AND WHITPAIN TOWNSHIP STANDARDS, RESPECTIVELY.

24. SANITARY SEWER AND WATER SERVICE LINES SHALL MAINTAIN A MINIMUM COVER OF 3 1/2'.

25. ALL TOP SOIL AND FILL MATERIAL IMPORTED TO THIS SITE BY THE CONTRACTOR OR HIS SUBCONTRACTOR(S) SHALL STRICTLY COMPLY WITH THE REQUIREMENTS OF THE DEP "CLEAN FILL POLICY" WHICH ARE IN EFFECT AT THE TIME OF THE FILL IMPORT. NO TOPSOIL SHALL BE REMOVED FROM THIS SITE EXCEPT FOR PROVIDING SOIL AMENDMENTS.

26. THE CONTRACTOR SHALL HAVE A PREPAREDNESS PREVENTION AND CONTINGENCY (PPC) PLAN ON SITE AT ALL TIMES.

28. STORM AND SANITARY SEWER LENGTHS AND SLOPES ARE MEASURED FROM CENTER OF STRUCTURE TO CENTER OF STRUCTURE.

29. WHITPAIN TOWNSHIP SHALL OWN AND MAINTAIN THE FIELDS, PARKING LOT, ROADS, AND ALL ASSOCIATED STORMWATER MANAGEMENT FACILITIES.

PENNSYLVANIA ONE CALL SYSTEM, INC. 1-800-242-1776 STOP - CALL BEFORE YOU DIG

LOCATIONS OF ALL EXISTING UTILITIES SHOWN HEREON HAVE BEEN DEVELOPED FROM UTILITY COMPANY RECORDS AND/OR ABOVE-GROUND INSPECTION OF THE SITE. COMPLETENESS OR ACCURACY OF TYPE, SIZE, DEPTH OR HORIZONTAL LOCATION OF UNDERGROUND FACILITIES OR STRUCTURES CANNOT BE GUARANTEED. PURSUANT TO REQUIREMENTS OF THE PENNSYLVANIA LEGISLATIVE ACT NUMBER 38, CONTRACTORS MUST VERIFY LOCATION AND DEPTH OF ALL UNDERGROUND UTILITIES AND FACILITIES PRIOR TO START OF WORK. SERIAL NUMBER 20110671016.

LEGEND

- EXISTING CONTOUR
- EXISTING INDEX CONTOUR
- EXISTING TREE CANOPY
- INFILTRATION TEST LOCATION
- EXISTING WETLANDS
- PROPOSED PAVEMENT
- PROPOSED 8' WIDE 2"TH STONE DUST ON 4"TH MIN. MILLINGS TRAIL
- PROPOSED 6"TH MILLINGS PARKING AREA
- PROPOSED CONTOUR
- PROPOSED INDEX CONTOUR
- PROPOSED TREE CLEAR LINE
- TURF REINFORCEMENT MAT
- INFILTRATION BASIN SEEDING
- SOIL AMENDMENT
- IRRIGATION TANK WATER TRANSFER LINE
- WATER
- ELECTRIC
- STORM SEWER
- SANITARY SEWER
- RIP-RAP APRON

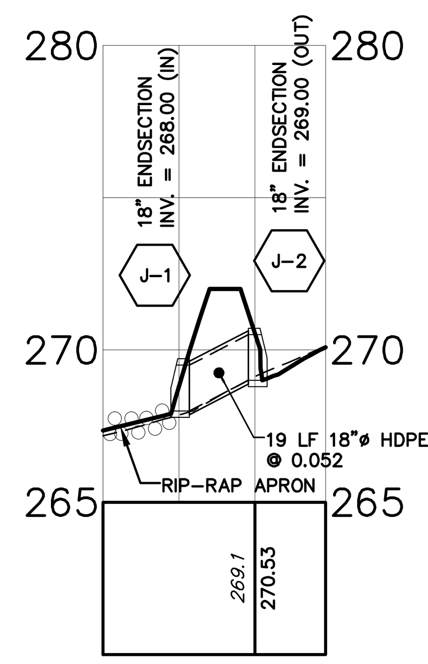

STORM SEWER PROFILE J-1 TO J-2

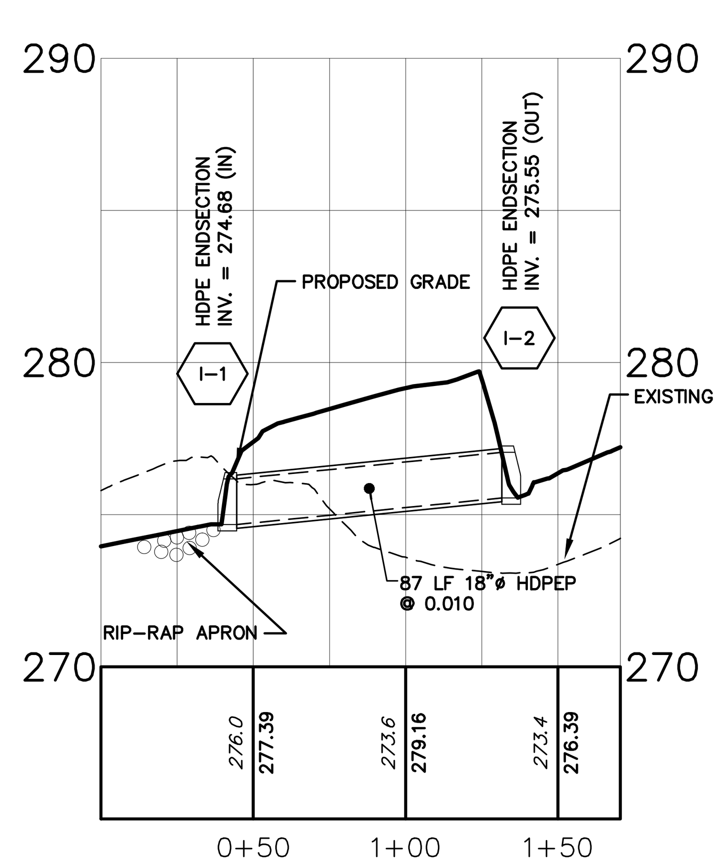

STORM SEWER PROFILE I-2 TO I-1

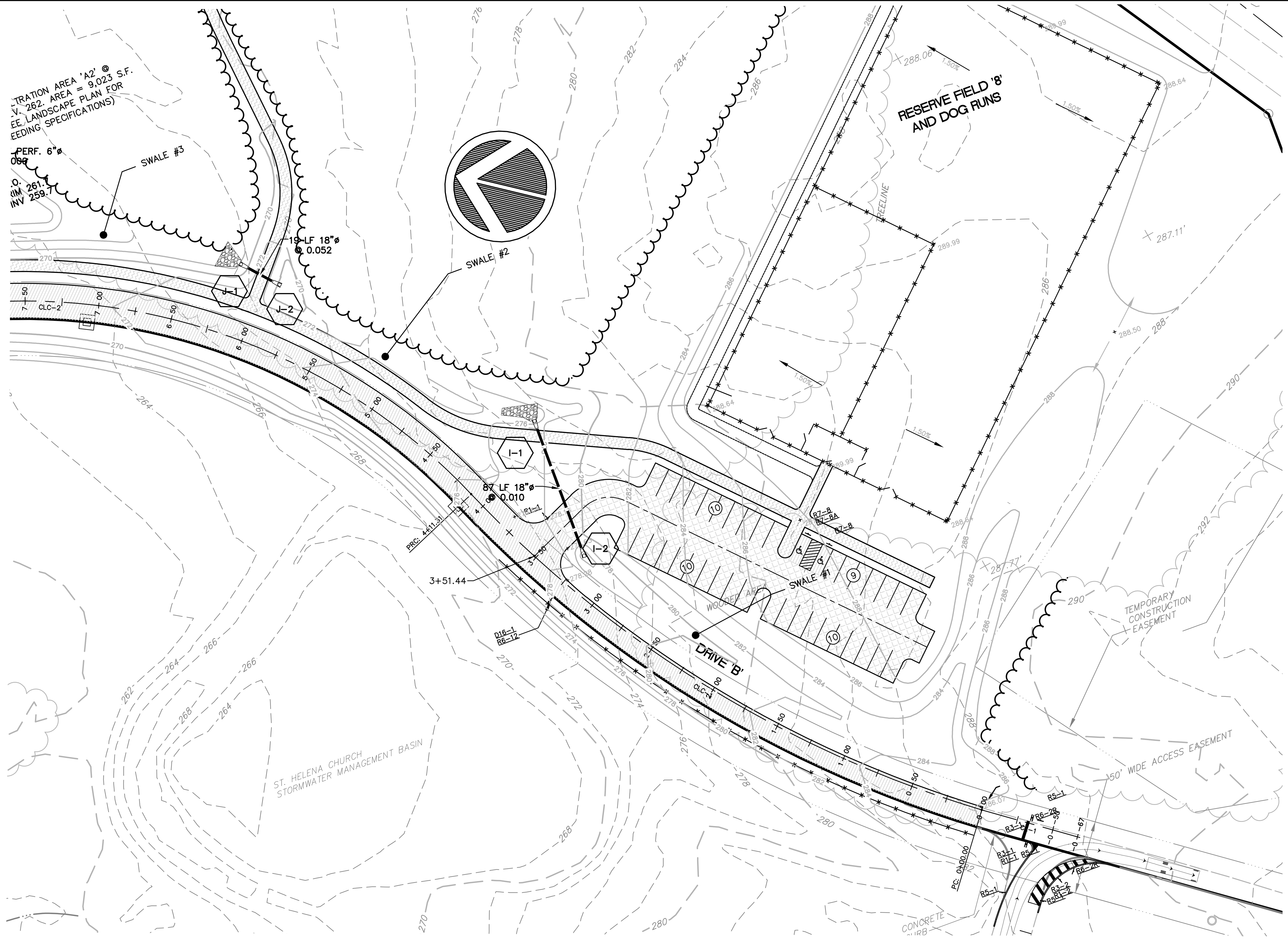

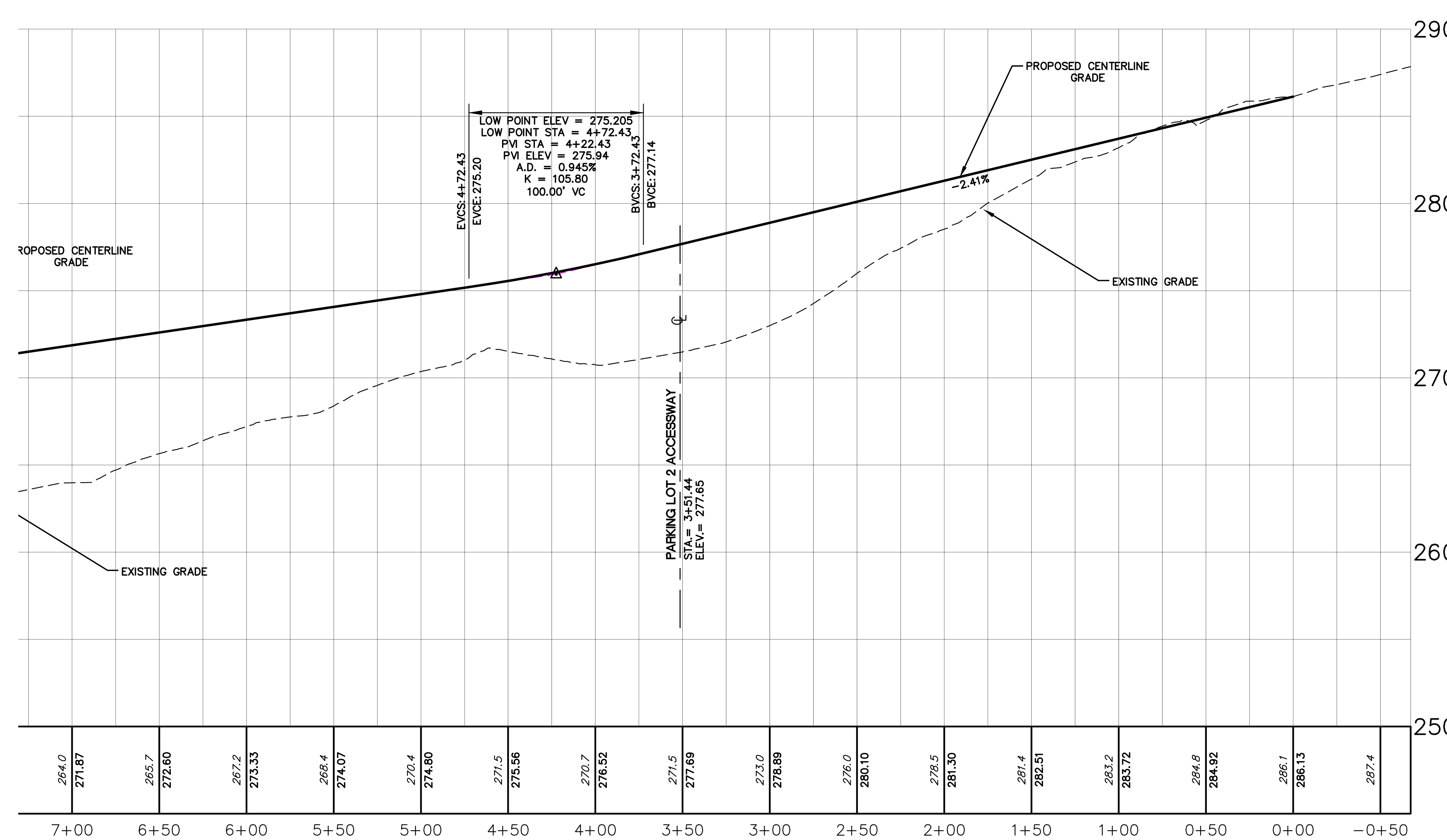

DRIVE-B

HIBBELN ENGINEERING COMPANY, L.L.C.
CONSULTING ENGINEERS
215-619-9070 PA, NJ, MD & DE
593 Skippack Pike, Suite 300
Blue Bell, Pennsylvania 19422
www.hibbelnengineering.com

IN CONJUNCTION WITH:

LandConcepts
593 Skippack Pike • Suite 300 • Blue Bell, PA 19422

COOK TRACT ATHLETIC FIELDS

PREPARED FOR
WHITPAIN TOWNSHIP
SITE SITUATE IN
WHITPAIN TOWNSHIP
MONTGOMERY COUNTY, PENNSYLVANIA

ALL DOCUMENTS PREPARED BY HIBBELN ENGINEERING COMPANY, L.L.C. ARE INSTRUMENTS OF SERVICE IN RESPECT OF THE PROJECT. THEY ARE NOT INTENDED OR REPRESENTED TO BE SUITABLE FOR REUSE BY OWNER OR OTHERS OR EXTENSIONS OF THE PROJECT OR ON ANY OTHER PROJECT. ANY REUSE WITHOUT WRITTEN VERIFICATION OR ADAPTATION BY HIBBELN ENGINEERING COMPANY, L.L.C. FOR THE SPECIFIC PURPOSE INTENDED WILL BE AT OWNERS SOLE RISK AND WITHOUT LIABILITY OR LEGAL EXPOSURE TO HIBBELN ENGINEERING COMPANY, L.L.C.; AND OWNER SHALL INDEMNIFY AND HOLD HARMLESS HIBBELN ENGINEERING COMPANY, L.L.C. FROM ALL CLAIMS, DAMAGES, LOSSES AND EXPENSES ARISING OUT OF OR RESULTING THEREFROM.

NO.	REVISIONS	
6	PER ADDITION OF SEDIMENT BASIN B PHASE 4 PLAN	JUNE 18, 2012
5	PER MCCD LETTER (2-9-12)	FEBRUARY 10, 2012
4	PER STORM SYTEM 'B'	JANUARY 31, 2012
3	PER MCCD LETTER (1/3/12)	JANUARY 5, 2012
2	PER SANITARY SEWER RELOCATION	DECEMBER 19, 2011
1	100% COMPLETION PLAN	NOVEMBER 22, 2011
	PLAN ORIGINATION DATE	AUGUST 26, 2011

HIBBELN ENGINEERING COMPANY, L.L.C. CONSULTING ENGINEERS

DRIVE 'B' PLAN AND PROFILE

COOK TRACT ATHLETIC FIELDS
SITE SITUATE IN
WHITPAIN TOWNSHIP
MONTGOMERY COUNTY, PENNSYLVANIA

PROJECT MANAGER: DSC/AJH	DRAFTED BY: JBS
PROJECT NUMBER: 12460	DRAWING FILE: #12460_SHT13-21
PLAN SCALE: HORIZ.: 1" = 50' VERT.: 1" = 5'	PLAN SHEET NUMBER 14 OF 38

0' 25' 50' 100'
GRAPHIC SCALE

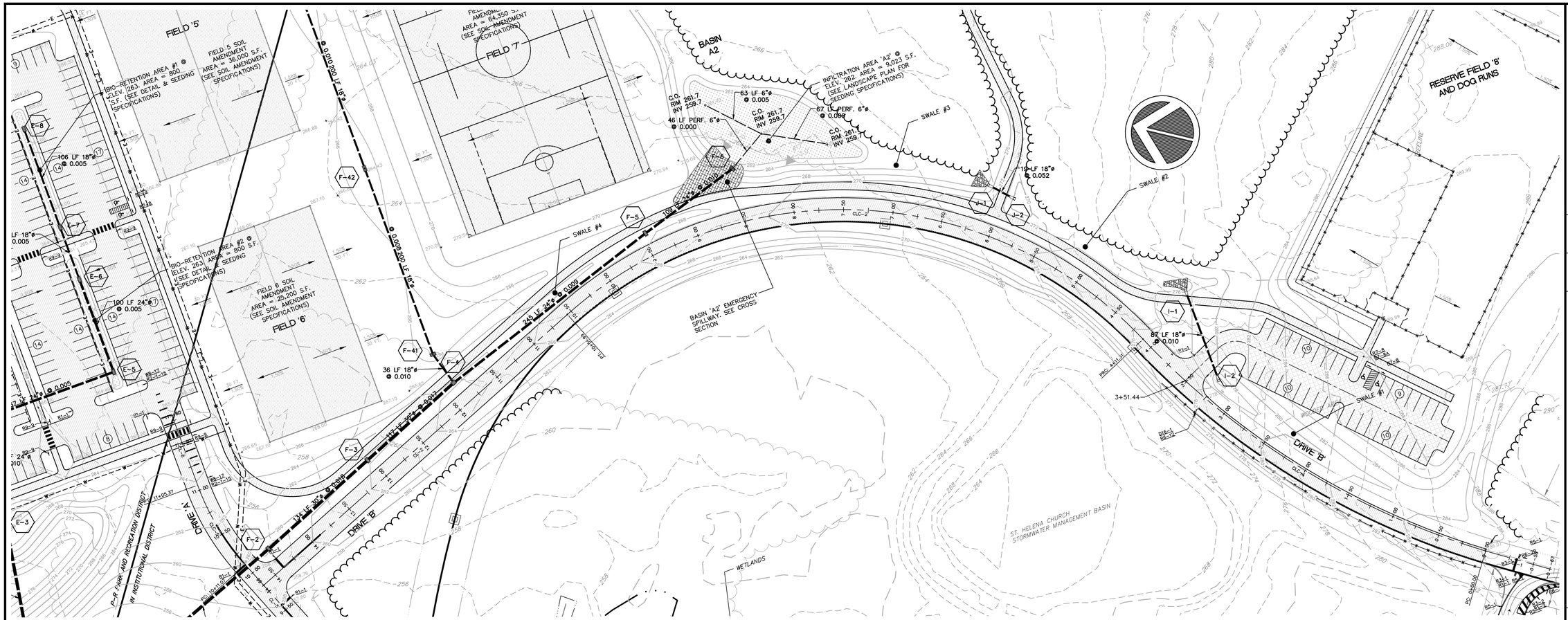

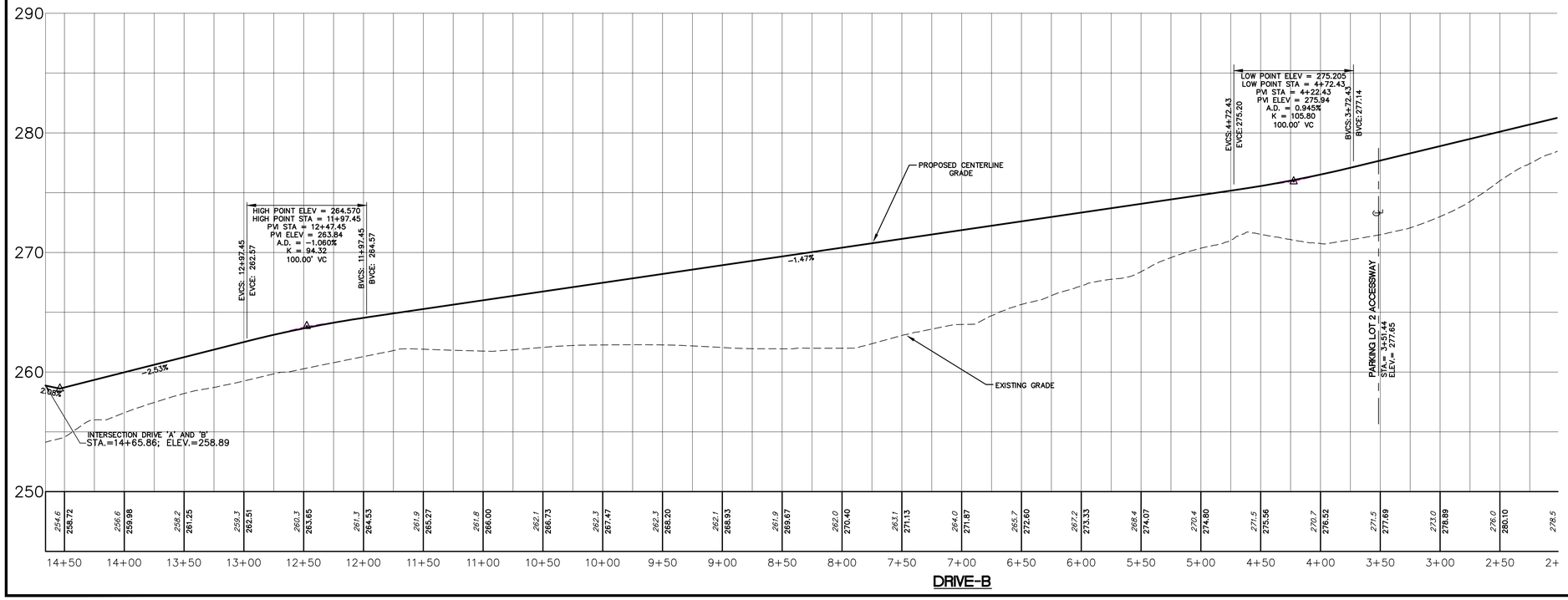

LEGEND

- EXISTING CONTOUR
- EXISTING INDEX CONTOUR
- EXISTING TREE CANOPY
- INFILTRATION TEST LOCATION
- EXISTING WETLANDS
- PROPOSED PAVEMENT
- PROPOSED 8' WIDE 2"TH STONE DUST ON 4"TH MIN. MILLINGS TRAIL
- PROPOSED 6"TH MILLINGS PARKING AREA
- PROPOSED CONTOUR
- PROPOSED INDEX CONTOUR
- PROPOSED TREE CLEAR LINE
- TURF REINFORCEMENT MAT
- INFILTRATION BASIN SEEDING
- SOIL AMENDMENT
- IRRIGATION TANK WATER TRANSFER LINE
- WATER
- ELECTRIC
- STORM SEWER
- SANITARY SEWER
- RIP-RAP APRON

LOCATIONS OF ALL EXISTING UTILITIES SHOWN HEREON HAVE BEEN DEVELOPED FROM UTILITY COMPANY RECORDS AND/OR ABOVE-GROUND INSPECTION OF THE SITE. COMPLETENESS OR ACCURACY OF TYPE, SIZE, DEPTH OR HORIZONTAL LOCATION OF UNDERGROUND FACILITIES OR STRUCTURES CANNOT BE GUARANTEED. PURSUANT TO REQUIREMENTS OF THE PENNSYLVANIA LEGISLATIVE ACT NUMBER 38, CONTRACTORS MUST VERIFY LOCATION AND DEPTH OF ALL UNDERGROUND UTILITIES AND FACILITIES PRIOR TO START OF WORK. SERIAL NUMBER 20110671016.

HIBBELN ENGINEERING COMPANY, L.L.C.
CONSULTING ENGINEERS
215-619-9070 PA, NJ, MD & DE
593 Skippack Pike, Suite 300
Blue Bell, Pennsylvania 19422
www.hibbelnengineering.com
IN CONJUNCTION WITH:
LandConcepts
593 Skippack Pike • Suite 300 • Blue Bell, PA 19422

COOK TRACT ATHLETIC FIELDS

PREPARED FOR
WHITPAIN TOWNSHIP

SITE SITUATE IN
WHITPAIN TOWNSHIP
MONTGOMERY COUNTY, PENNSYLVANIA

NO.	REVISIONS	PLAN ORIGINATION DATE
1.	TOWE COMPLETION PLAN	AUGUST 26, 2011
2.	PER MCCD LETTER (12-9-11)	NOVEMBER 22, 2011
3.	PER MCCD LETTER (1/27/12)	JANUARY 9, 2012
4.	PER STORM SYTEM 'B'	JANUARY 31, 2012
5.	PER MCCD LETTER (2-9-12)	FEBRUARY 10, 2012
6.	PER ADDITION OF SEDIMENT BASIN B PHASE 4 PLAN	JUNE 18, 2012

THE DESIGNS INCORPORATED WITHIN THIS PLAN ARE THE EXCLUSIVE PROPERTY OF HIBBELN ENGINEERING COMPANY, L.L.C. AND SHALL NOT BE USED IN ANY WAY, IN WHOLE OR IN PART, WITHOUT THE WRITTEN PERMISSION OF HIBBELN ENGINEERING COMPANY, L.L.C. ANY UNAUTHORIZED USE SHALL BE AT THE USER'S SOLE RISK AND WITHOUT LIABILITY TO HIBBELN ENGINEERING COMPANY, L.L.C. AND THE USER SHALL INDEMNIFY AND HOLD HARMLESS HIBBELN ENGINEERING COMPANY, L.L.C. FROM ALL CLAIMS, DAMAGES, LOSSES AND EXPENSES ARISING OUT OF OR RESULTING THEREFROM.

HIBBELN ENGINEERING COMPANY, L.L.C.
CONSULTING ENGINEERS

DRIVE 'B' PLAN AND PROFILE

COOK TRACT ATHLETIC FIELDS
SITE SITUATE IN
WHITPAIN TOWNSHIP
MONTGOMERY COUNTY, PENNSYLVANIA

PROJECT MANAGER: DSC/AJH	DRAFTED BY: JBS
PROJECT NUMBER: 12460	DRAWING FILE: #12460_SHT13-21
PLAN SCALE: HORIZ.: 1" = 50' VERT.: 1" = 5'	PLAN SHEET NUMBER 15 OF 38

0' 25' 50' 100'
GRAPHIC SCALE

CONSTRUCTION NOTES

1. TITLE BOUNDARY AND PARTIAL TOPOGRAPHY PROVIDED BY LANDMARKER GEOSPATIAL, INC., PER FIELD SURVEY MAY OF 2011. SUPPLEMENTAL TOPOGRAPHY PROVIDED VIA PAMAP LiDAR.

2. PURSUANT TO THE FEDERAL EMERGENCY MANAGEMENT AGENCY (FEMA) MAP 42091C0266 E, EFFECTIVE DATE DECEMBER 19 1996 NUMBER 420713 PANEL 0266, SUFFIX E, 100 YEAR FLOOD LIMITS ARE CONTAINED WITHIN THE SUBJECT TRACTS.

3. A WETLANDS EVALUATION UTILIZING STANDARD PROCEDURES DEVELOPED BY THE U.S. ARMY CORPS OF ENGINEERS DELINEATION MANUAL, (JANUARY 1987, AS AMENDED) WAS PERFORMED IN MARCH 2011, BY GREAT VALLEY ENVIRONMENTAL, INC. PORTIONS OF THE SITE ARE CLASSIFIED AS WETLANDS AND REGULATED WATERS OF THE UNITED STATES.

4. ALL CONSTRUCTION SHALL BE PERFORMED IN ACCORDANCE WITH PADOT SPECIFICATIONS, PUBLICATION 408/90 AND TO WHITPAIN TOWNSHIP STANDARDS.

5. ALL UTILITY LOCATIONS DEPICTED HEREON ARE APPROXIMATE, CONTRACTOR IS RESPONSIBLE FOR LOCATION VERIFICATION PRIOR TO COMMENCEMENT OF ANY WORK.

6. PERMITS SHALL BE OBTAINED FROM WHITPAIN TOWNSHIP PRIOR TO THE COMMENCEMENT OF ANY CONSTRUCTION.

7. THE CONTRACTOR SHALL NOTIFY THE DESIGN ENGINEER PRIOR TO THE CONSTRUCTION OF THE BIO-RETENTION FACILITY AS IT IS A CRITICAL STAGE OF THE IMPLEMENTATION OF THE POST CONSTRUCTION STORMWATER MANAGEMENT PLAN. IN ADDITION, IN ACCORDANCE WITH 102.8(F)(7) AND 102.8(K), THE PERMITTEE SHALL PROVIDE THE CONSERVATION DISTRICT WITH A SCHEDULE OF INSPECTIONS FOR CRITICAL STAGES OF PCSM BMP INSTALLATION, INCLUDING SOIL AMENDMENTS, AND ENSURE THAT A LICENSED PROFESSIONAL PROVIDES OVERSIGHT OF THOSE CRITICAL STAGES. NOTIFICATION OF PCSM BMP INSTALLATION, PARTICULARLY SOIL AMENDMENT INSTALLATION, SHALL BE GIVEN TO THE MONTGOMERY COUNTY CONSERVATION DISTRICT SEVEN DAYS PRIOR TO COMMENCEMENT.

8. PROPOSED CONNECTIONS TO EXISTING STORM AND SANITARY SEWER HAVE BEEN BASED UPON BEST AVAILABLE SURVEY DATA. CONTRACTOR SHALL VERIFY EXISTING STORM AND SANITARY SEWER INVERTS, RIMS, AND TOP OF GRATE ELEVATIONS AT ALL PROPOSED CONNECTION POINTS PRIOR TO ANY AND ALL CONSTRUCTION.

9. PROPOSED CURB ELEVATIONS SPECIFIED HEREON ARE FINISH GRADE GUTTER LINE ELEVATIONS. ALL PROPOSED ELEVATIONS HAVE BEEN CALCULATED UTILIZING BEST AVAILABLE SURVEY DATA OF EXISTING CENTERLINE AND EDGE OF CARTWAY ELEVATION SHOTS AT THE TIME OF DESIGN. CONTRACTOR SHALL VERIFY EXISTING CENTERLINE AND EDGE OF CARTWAY ELEVATION SHOTS PRIOR TO ANY AND ALL CONSTRUCTION.

10. BENCHMARK: EXISTING CONCRETE MONUMENT, ELEVATION= 262.92

11. WHEREVER PHYSICAL LIMITATIONS RESULT IN NOT SATISFYING THE REQUIRED 18 INCH MINIMUM CLEARANCE BETWEEN PUBLIC WATER FACILITIES AND ANY OTHER UTILITY (i.e. STORM, SANITARY, ETC.), 6" THICK FULL CONCRETE ENCASEMENT SHALL BE PROVIDED AS FOLLOWS:

a) FOR CONFLICTS BETWEEN WATER AND SANITARY SEWER, INCLUDING LATERALS AND SERVICES, THE SANITARY SEWER SHALL BE ENCASED FOR A MINIMUM DISTANCE OF TEN (10) FEET ON BOTH SIDES OF THE WATER LINE.

b) FOR CONFLICTS BETWEEN WATER AND STORM SEWER, INCLUDING SERVICES, THE WATER LINE SHALL BE ENCASED FOR A MINIMUM DISTANCE ON TEN (10) FEET OF BOTH SIDES OF THE STORM SEWER.

c) FOR CONFLICTS BETWEEN SANITARY SEWER AND STORM SEWER, INCLUDING LATERALS, THE SANITARY LINE SHALL BE ENCASED FOR A MINIMUM DISTANCE ON TEN (10) FEET OF BOTH SIDES OF THE STORM SEWER.

12. AN 18 INCH VERTICAL CLEARANCE OR A 10 FOOT HORIZONTAL CLEARANCE SHALL BE MAINTAINED BETWEEN ALL SANITARY SEWER AND WATER LINES, INCLUDING LATERALS AND SERVICES WHERE POSSIBLE TO MAINTAIN HORIZONTAL CLEARANCE, AN 18 INCH VERTICAL CLEARANCE MUST BE MAINTAINED AND SANITARY AND WATER LINES MUST BE CONSTRUCTED IN SEPARATE OR BENCHED TRENCHES.

13. TOP OF GRATE AND RIM ELEVATIONS SPECIFIED HEREON ARE FROM CENTER OF STRUCTURE. CONTRACTOR IS RESPONSIBLE FOR PROJECTING THE ROADWAY/PARKING GRADE ALONG THE LENGTH OF THE STRUCTURE.

14. SPOT ELEVATIONS AT FACE OF CURB REPRESENT FINISH GRADE AT BOTTOM OF CURB FACE REVEAL.

15. ANY AND ALL FILL SHALL BE PLACED PER THE RECOMMENDATIONS OF THE GEO-TECHNICAL CONSULTANT.

16. ALL PROPOSED HDPEP SHALL BE SMOOTH BORE INTERIOR. THERMO-PLASTIC PIPE CAN BE SUBSTITUTED WITH THE APPROVAL OF WHITPAIN TOWNSHIP.

17. ALL INLETS GRATES SHALL BE PEDESTRIAN SAFE STRUCTURAL STEEL.

18. PAVEMENT AND STONE SUBBASE SHALL BE PLACED ON A PREPARED SUBGRADE, FREE OF SOFT, MUDDY, OR FROZEN AREAS. SUCH UNSATISFACTORY SOFT AREAS SHALL BE CORRECTED BY SCARIFYING, RESHAPING, AND RE-COMPACTING EXISTING MATERIAL, OR BY REPLACING SOFT MATERIAL WITH STABLE, SUITABLE MATERIAL. UNSATISFACTORY MATERIAL SHALL BE REPLACED WHEN DIRECTED BY THE TOWNSHIP ENGINEER. IT SHALL BE THE RESPONSIBILITY OF THE CONTRACTOR TO VERIFY REQUIRED STABILITY OF SUBGRADE THROUGH COMPACTION TESTING SUITABLE TO THE TOWNSHIP ENGINEER. PRIOR TO PLACEMENT OF THE WEARING COURSE, A TACK COAT CONFORMING TO PUBLICATION 408, SECTION 460.3, SHALL BE APPLIED TO THE BITUMINOUS BASE COURSE (OR BINDER COURSE, WHERE APPROVED) WHEN DIRECTED BY THE TOWNSHIP ENGINEER.

19. WHERE UTILITY INSTALLATION OCCURS, THE EXACT EXTENT OF ROAD MAINTENANCE AND REPAIR SHALL BE DETERMINED BY THE RECOMMENDATION OF THE TOWNSHIP ENGINEER.

20. A TEN (10) FOOT HORIZONTAL SEPARATION SHALL BE MAINTAINED BETWEEN THE PROPOSED SEWER (INCLUDING LATERALS) AND ALL LANDSCAPING.

21. A TEN (10) FOOT HORIZONTAL SEPARATION SHALL BE MAINTAINED BETWEEN THE PROPOSED WATER FACILITIES (INCLUDING SERVICES) AND ALL LANDSCAPING.

22. A MINIMUM SLOPE OF 2% SHALL BE PROVIDED FOR SEWER LATERALS.

23. THE WATER AND SANITARY SEWER SYSTEMS SHALL BE INSTALLED IN ACCORDANCE WITH THE APPLICABLE AUTHORITIES AND WHITPAIN TOWNSHIP STANDARDS, RESPECTIVELY.

24. SANITARY SEWER AND WATER SERVICE LINES SHALL MAINTAIN A MINIMUM COVER OF 3 1/2'.

25. ALL TOP SOIL AND FILL MATERIAL IMPORTED TO THIS SITE BY THE CONTRACTOR OR HIS SUBCONTRACTOR(S) SHALL STRICTLY COMPLY WITH THE REQUIREMENTS OF THE DEP "CLEAN FILL POLICY" WHICH ARE IN EFFECT AT THE TIME OF THE FILL IMPORT. NO TOPSOIL SHALL BE REMOVED FROM THIS SITE EXCEPT FOR PROVIDING SOIL AMENDMENTS.

26. THE CONTRACTOR SHALL HAVE A PREPAREDNESS PREVENTION AND CONTINGENCY (PPC) PLAN ON SITE AT ALL TIMES.

28. STORM AND SANITARY SEWER LENGTHS AND SLOPES ARE MEASURED FROM CENTER OF STRUCTURE TO CENTER OF STRUCTURE.

29. WHITPAIN TOWNSHIP SHALL OWN AND MAINTAIN THE FIELDS, PARKING LOT, ROADS, AND ALL ASSOCIATED STORMWATER MANAGEMENT FACILITIES.

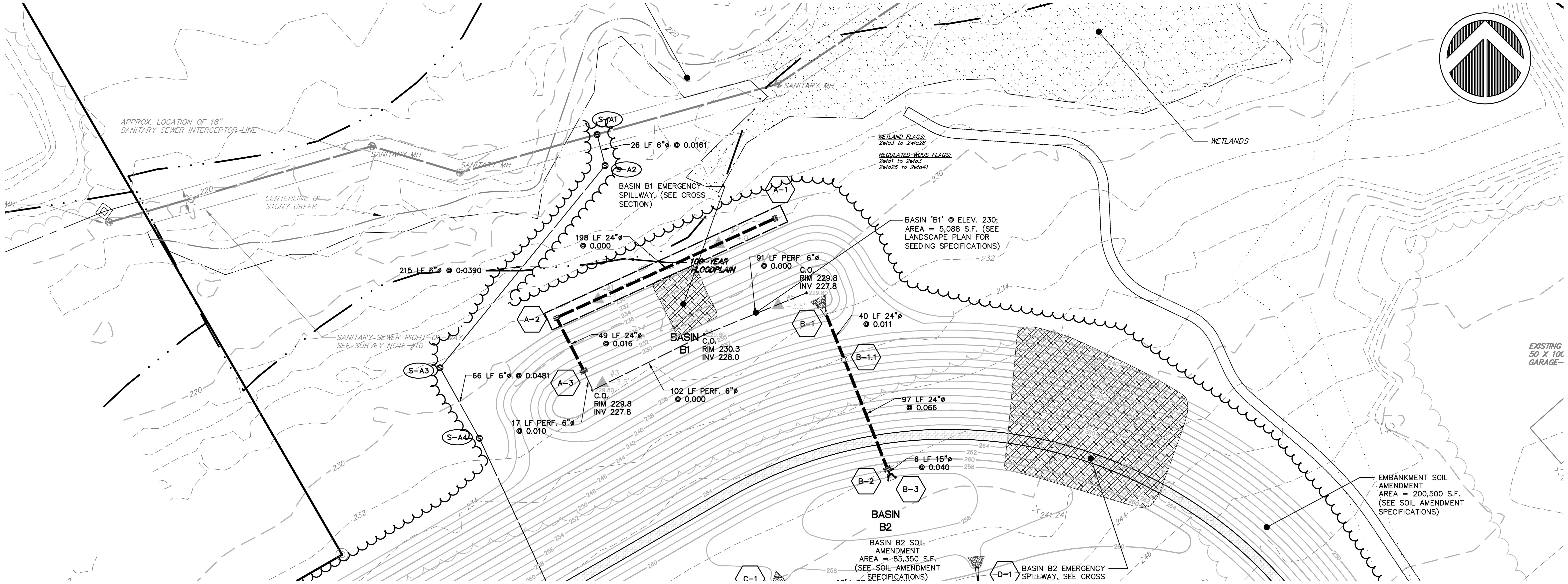

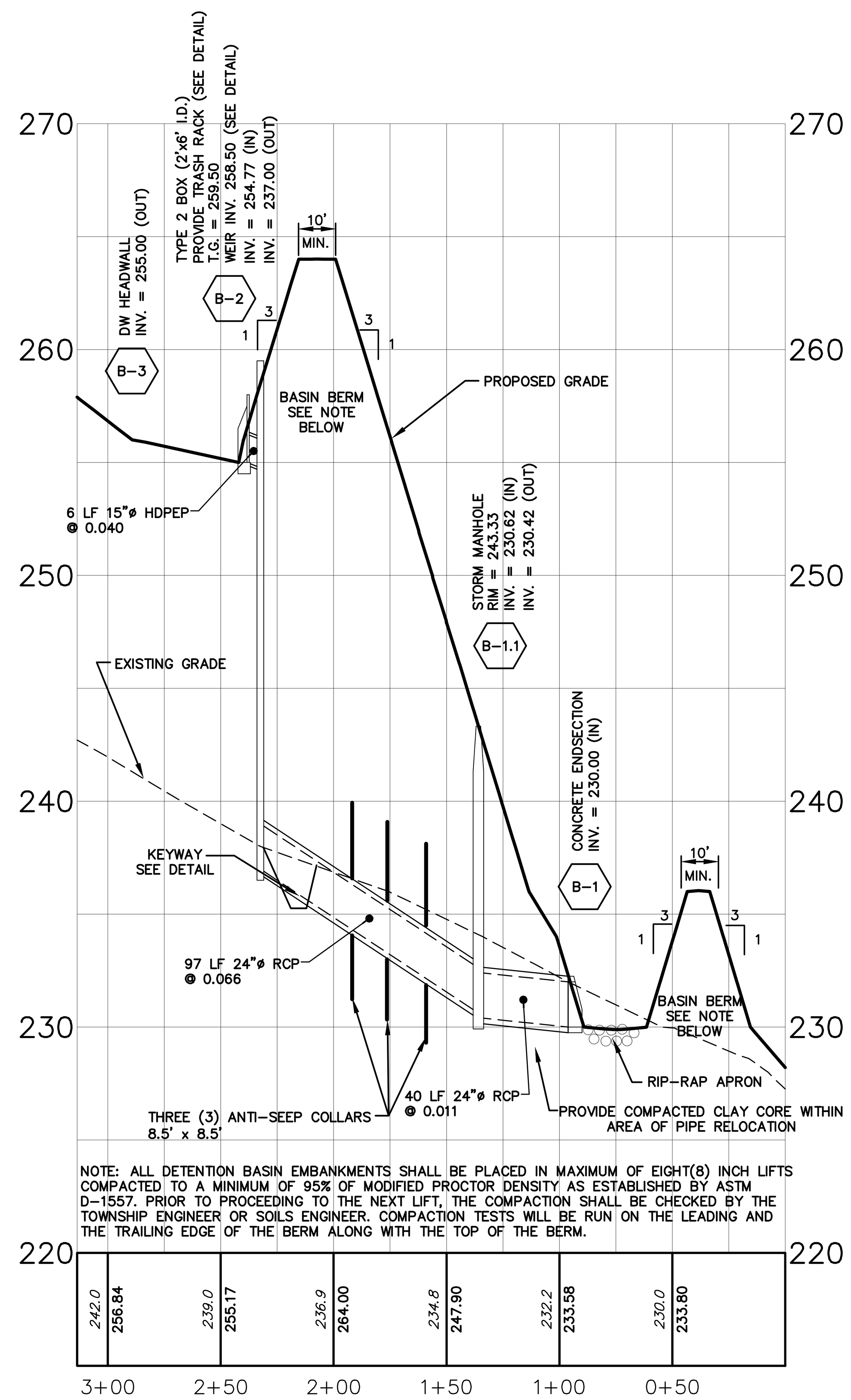

STORM SEWER PROFILE B-3 TO B-1

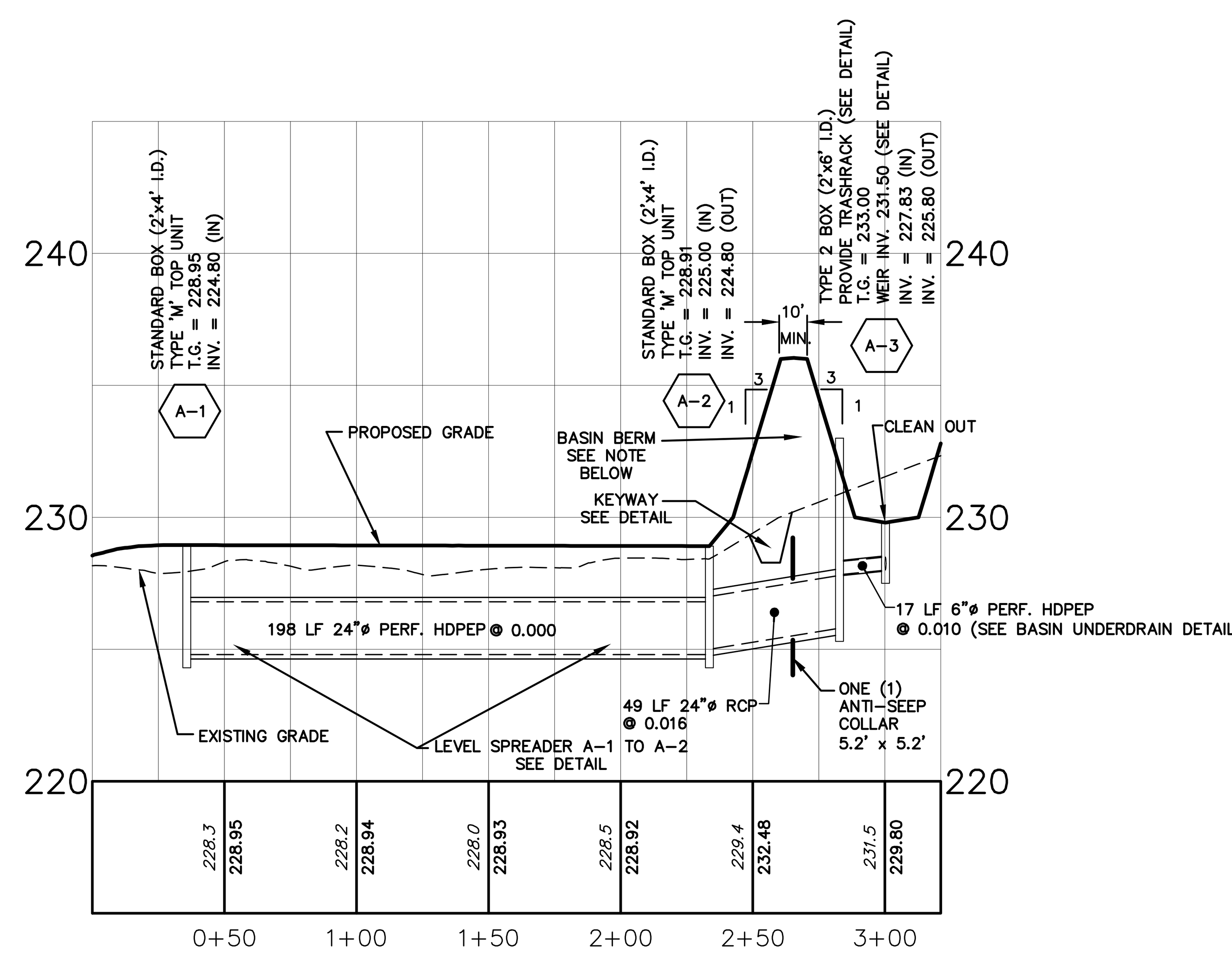

STORM SEWER PROFILE A-1 TO A-3

NOTE: ALL DETENTION BASIN EMBANKMENTS SHALL BE PLACED IN MAXIMUM OF EIGHT(8) INCH LIFTS COMPACTED TO A MINIMUM OF 95% OF MODIFIED PROCTOR DENSITY AS ESTABLISHED BY ASTM D-1557. PRIOR TO PROCEEDING TO THE NEXT LIFT, THE COMPACTION SHALL BE CHECKED BY THE TOWNSHIP ENGINEER OR SOILS ENGINEER. COMPACTION TESTS WILL BE RUN ON THE LEADING AND THE TRAILING EDGE OF THE BERM ALONG WITH THE TOP OF THE BERM.

LEGEND

- EXISTING CONTOUR
- EXISTING INDEX CONTOUR
- EXISTING TREE CANOPY
- INFILTRATION TEST LOCATION
- EXISTING WETLANDS
- PROPOSED PAVEMENT
- PROPOSED 8' WIDE 2"TH STONE DUST ON 4"TH MIN. MILLINGS TRAIL
- PROPOSED 6"TH MILLINGS PARKING AREA
- PROPOSED CONTOUR
- PROPOSED INDEX CONTOUR
- PROPOSED TREE CLEAR LINE
- TURF REINFORCEMENT MAT
- INFILTRATION BASIN SEEDING
- SOIL AMENDMENT
- IRRIGATION TANK WATER TRANSFER LINE
- WATER
- ELECTRIC
- STORM SEWER
- SANITARY SEWER
- RIP-RAP APRON

PENNSYLVANIA ONE CALL SYSTEM, INC. 1-800-242-1776 STOP - CALL BEFORE YOU DIG

LOCATIONS OF ALL EXISTING UTILITIES SHOWN HEREON HAVE BEEN DEVELOPED FROM UTILITY COMPANY RECORDS AND/OR ABOVE-GROUND INSPECTION OF THE SITE. COMPLETENESS OR ACCURACY OF TYPE, SIZE, DEPTH OR HORIZONTAL LOCATION OF UNDERGROUND FACILITIES OR STRUCTURES CANNOT BE GUARANTEED. PURSUANT TO REQUIREMENTS OF THE PENNSYLVANIA LEGISLATIVE ACT NUMBER 38, CONTRACTORS MUST VERIFY LOCATION AND DEPTH OF ALL UNDERGROUND UTILITIES AND FACILITIES PRIOR TO START OF WORK. SERIAL NUMBER 20110671016.

HIBBELN ENGINEERING COMPANY, L.L.C.
CONSULTING ENGINEERS
215·619·9070 PA, NJ, MD & DE
593 Skippack Pike, Suite 300
Blue Bell, Pennsylvania 19422
www.hibbelnengineering.com
IN CONJUNCTION WITH:
LandConcepts
593 Skippack Pike • Suite 300 • Blue Bell, PA 19422

COOK TRACT ATHLETIC FIELDS

PREPARED FOR
WHITPAIN TOWNSHIP
SITE SITUATE IN
WHITPAIN TOWNSHIP
MONTGOMERY COUNTY, PENNSYLVANIA

ALL DOCUMENTS PREPARED BY HIBBELN ENGINEERING COMPANY, L.L.C. ARE INSTRUMENTS OF SERVICE IN RESPECT OF THE PROJECT. THEY ARE NOT INTENDED OR REPRESENTED TO BE SUITABLE FOR REUSE BY OWNER OR OTHERS OR EXTENSIONS OF THE PROJECT OR ON ANY OTHER PROJECT. ANY REUSE WITHOUT WRITTEN VERIFICATION OR ADAPTATION BY HIBBELN ENGINEERING COMPANY, L.L.C. FOR THE SPECIFIC PURPOSE INTENDED WILL BE AT OWNERS SOLE RISK AND WITHOUT LIABILITY OR LEGAL EXPOSURE TO HIBBELN ENGINEERING COMPANY, L.L.C.; AND OWNER SHALL INDEMNIFY AND HOLD HARMLESS HIBBELN ENGINEERING COMPANY, L.L.C. FROM ALL CLAIMS, DAMAGES, LOSSES AND EXPENSES ARISING OUT OF OR RESULTING THEREFROM.

NO.	REVISIONS	DATE
6	PER ADDITION OF SEDIMENT BASIN B PHASE 4 PLAN	JUNE 18, 2012
5	PER MCCD LETTER (2-9-12)	FEBRUARY 10, 2012
4	PER STORM SYTEM 'B'	JANUARY 31, 2012
3	PER MCCD LETTER (1/3/12)	JANUARY 5, 2012
2	PER SANITARY SEWER RELOCATION	DECEMBER 19, 2011
1	100% COMPLETION PLAN	NOVEMBER 22, 2011
	PLAN ORIGINATION DATE	AUGUST 26, 2011

HIBBELN ENGINEERING COMPANY, L.L.C. CONSULTING ENGINEERS

STORM SEWER 'A' AND 'B' PLAN AND PROFILE

COOK TRACT ATHLETIC FIELDS
SITE SITUATE IN
WHITPAIN TOWNSHIP
MONTGOMERY COUNTY, PENNSYLVANIA

PROJECT MANAGER: DSC/AJH	DRAFTED BY: JBS
PROJECT NUMBER: 12460	DRAWING FILE: #12460_SHT13-21
PLAN SCALE: HORIZ.: 1" = 50' VERT.: 1" = 5'	PLAN SHEET NUMBER 16 OF 38

0' 25' 50' 100'
GRAPHIC SCALE

LEGEND

- EXISTING CONTOUR
- EXISTING INDEX CONTOUR
- EXISTING TREE CANOPY
- INFILTRATION TEST LOCATION
- EXISTING WETLANDS
- PROPOSED PAVEMENT
- PROPOSED 8' WIDE 2"TH STONE DUST ON 4"TH MIN. MILLINGS TRAIL
- PROPOSED 6"TH MILLINGS PARKING AREA
- PROPOSED CONTOUR
- PROPOSED INDEX CONTOUR
- PROPOSED TREE CLEAR LINE
- TURF REINFORCEMENT MAT
- INFILTRATION BASIN SEEDING
- SOIL AMENDMENT
- IRRIGATION TANK WATER TRANSFER LINE
- WATER
- ELECTRIC
- STORM SEWER
- SANITARY SEWER
- RIP-RAP APRON

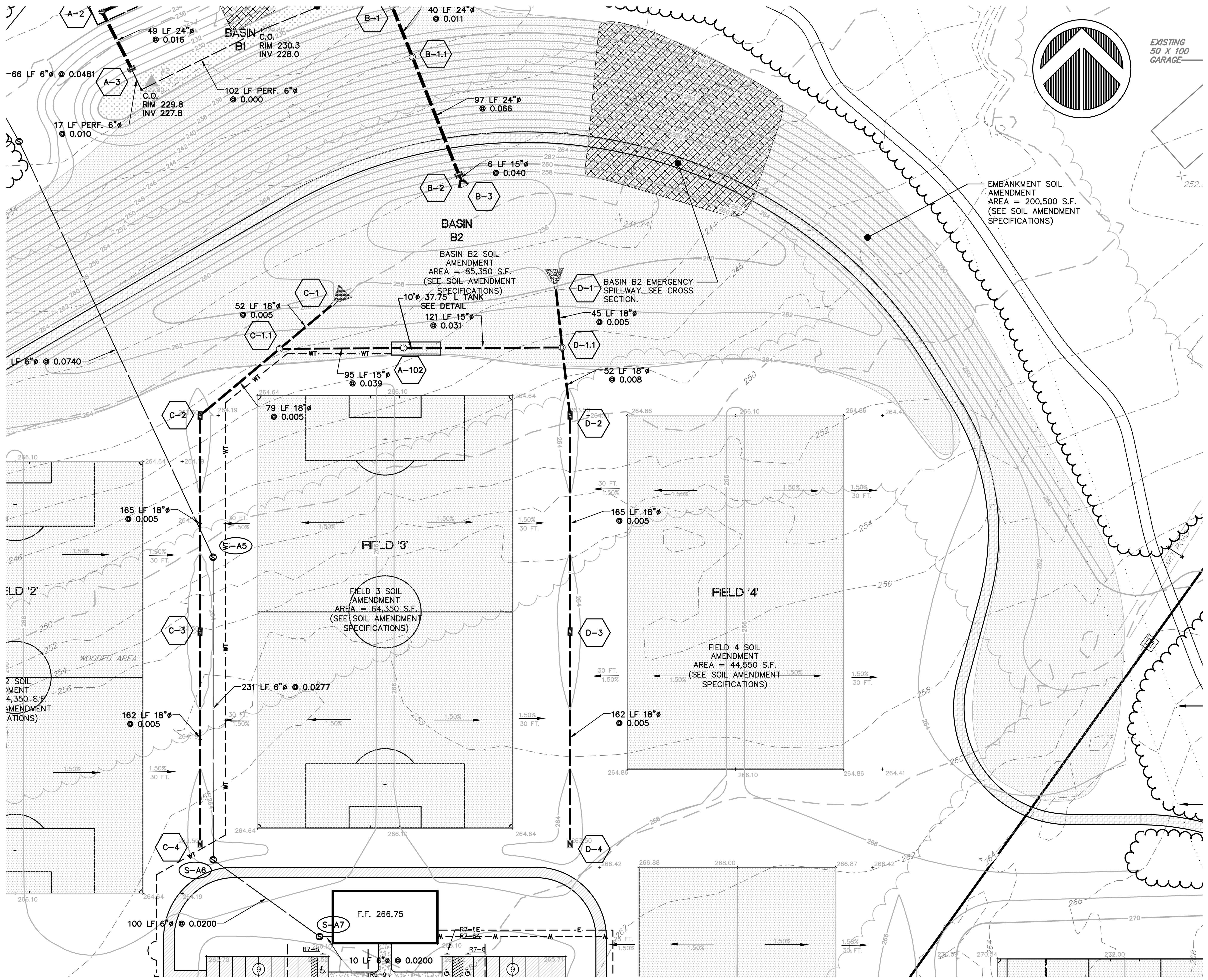

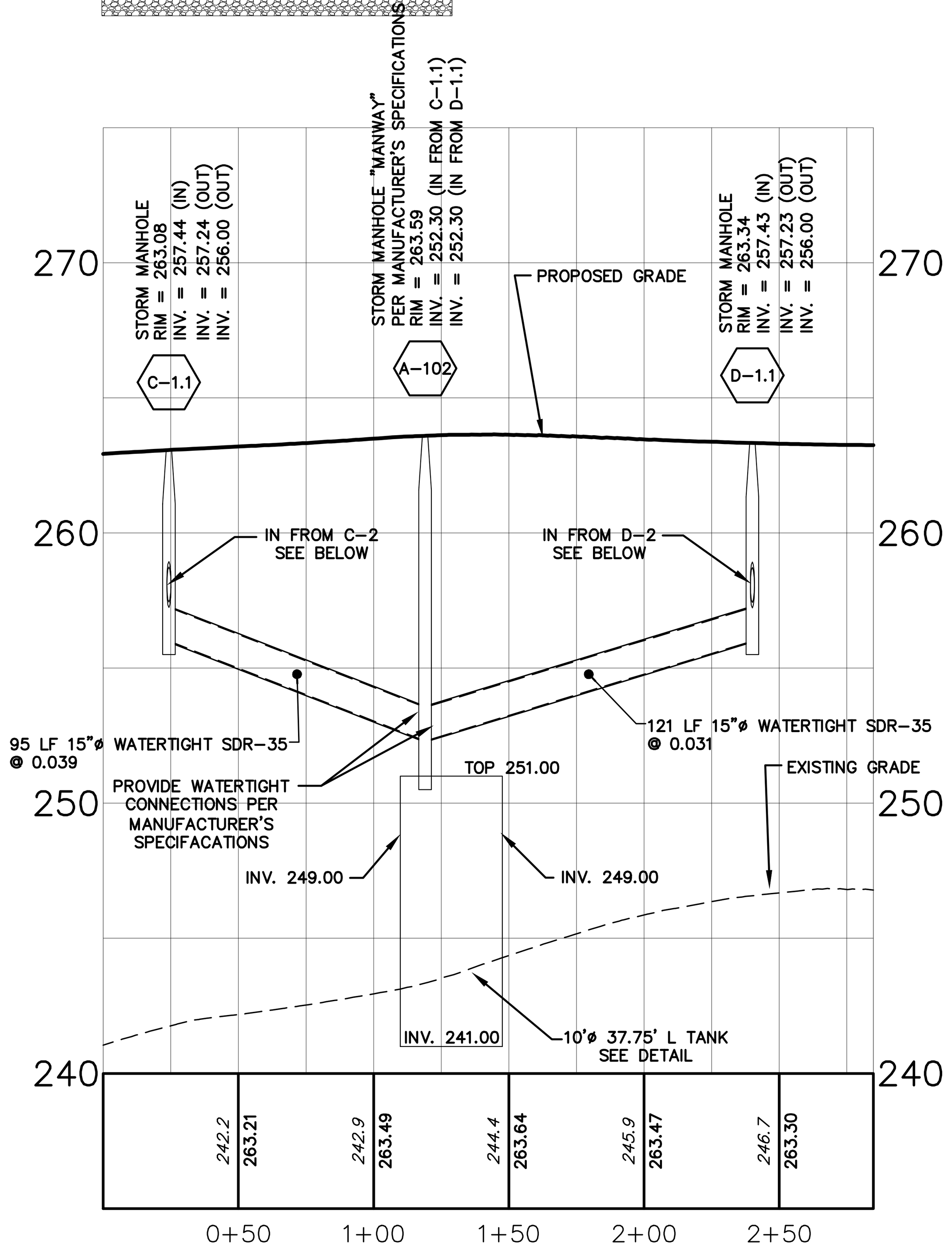

UNDERGROUND TANK 'B'

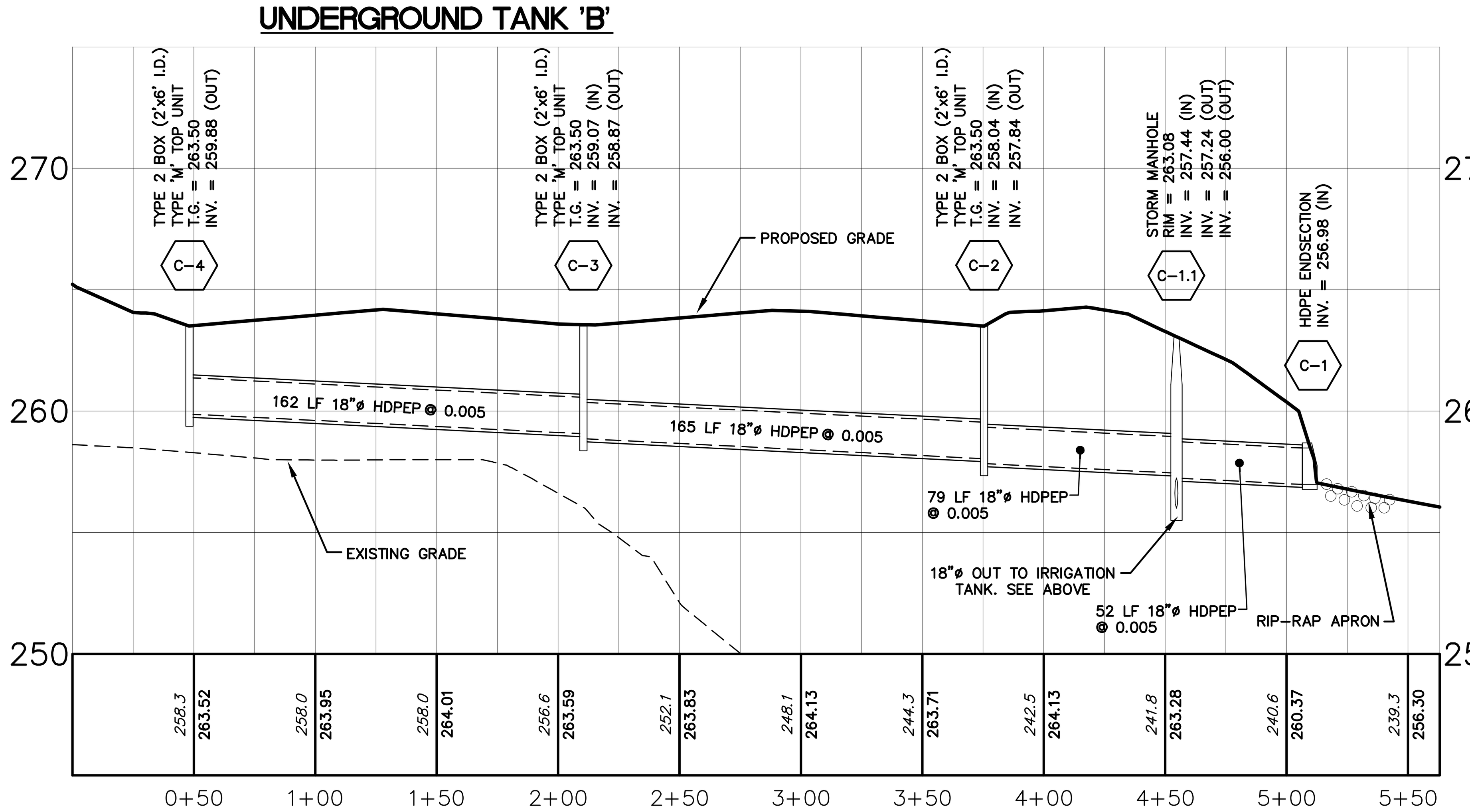

STORM SEWER PROFILE C-4 TO C-1

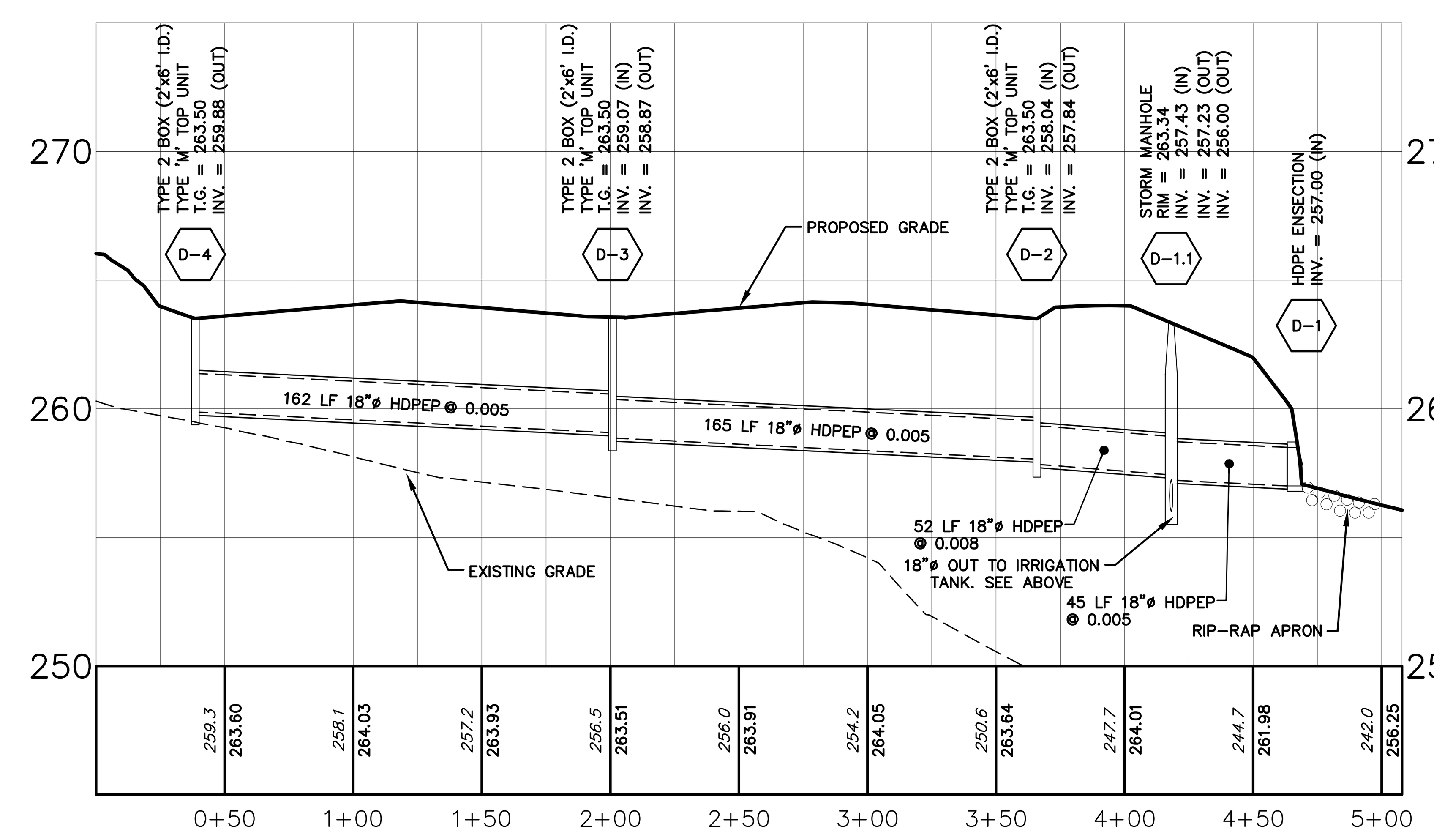

STORM SEWER PROFILE D-4 TO D-1

CONSTRUCTION NOTES

1. TITLE BOUNDARY AND PARTIAL TOPOGRAPHY PROVIDED BY LANDMARKER GEOSPATIAL, INC., PER FIELD SURVEY MAY OF 2011. SUPPLEMENTAL TOPOGRAPHY PROVIDED VIA PAMAP LiDAR.

2. PURSUANT TO THE FEDERAL EMERGENCY MANAGEMENT AGENCY (FEMA) MAP 42091C0266 E, EFFECTIVE DATE DECEMBER 19 1996 NUMBER 420713 PANEL 0266, SUFFIX E, 100 YEAR FLOOD LIMITS ARE CONTAINED WITHIN THE SUBJECT TRACTS.

3. A WETLANDS EVALUATION UTILIZING STANDARD PROCEDURES DEVELOPED BY THE U.S. ARMY CORPS OF ENGINEERS DELINEATION MANUAL, (JANUARY 1987, AS AMENDED) WAS PERFORMED IN MARCH 2011, BY GREAT VALLEY ENVIRONMENTAL, INC. PORTIONS OF THE SITE ARE CLASSIFIED AS WETLANDS AND REGULATED WATERS OF THE UNITED STATES.

4. ALL CONSTRUCTION SHALL BE PERFORMED IN ACCORDANCE WITH PADOT SPECIFICATIONS, PUBLICATION 408/90 AND TO WHITPAIN TOWNSHIP STANDARDS.

5. ALL UTILITY LOCATIONS DEPICTED HEREON ARE APPROXIMATE, CONTRACTOR IS RESPONSIBLE FOR LOCATION VERIFICATION PRIOR TO COMMENCEMENT OF ANY WORK.

6. PERMITS SHALL BE OBTAINED FROM WHITPAIN TOWNSHIP PRIOR TO THE COMMENCEMENT OF ANY CONSTRUCTION.

7. THE CONTRACTOR SHALL NOTIFY THE DESIGN ENGINEER PRIOR TO THE CONSTRUCTION OF THE BIO-RETENTION FACILITY AS IT IS A CRITICAL STAGE OF THE IMPLEMENTATION OF THE POST CONSTRUCTION STORMWATER MANAGEMENT PLAN. IN ADDITION, IN ACCORDANCE WITH 102.8(F)(7) AND 102.8(K), THE PERMITTEE SHALL PROVIDE THE CONSERVATION DISTRICT WITH A SCHEDULE OF INSPECTIONS FOR CRITICAL STAGES OF PCSM BMP INSTALLATION, INCLUDING SOIL AMENDMENTS, AND ENSURE THAT A LICENSED PROFESSIONAL PROVIDES OVERSIGHT OF THOSE CRITICAL STAGES. NOTIFICATION OF PCSM BMP INSTALLATION, PARTICULARLY SOIL AMENDMENT INSTALLATION, SHALL BE GIVEN TO THE MONTGOMERY COUNTY CONSERVATION DISTRICT SEVEN DAYS PRIOR TO COMMENCEMENT.

8. PROPOSED CONNECTIONS TO EXISTING STORM AND SANITARY SEWER HAVE BEEN BASED UPON BEST AVAILABLE SURVEY DATA. CONTRACTOR SHALL VERIFY EXISTING STORM AND SANITARY SEWER INVERTS, RIMS, AND TOP OF GRATE ELEVATIONS AT ALL PROPOSED CONNECTION POINTS PRIOR TO ANY AND ALL CONSTRUCTION.

9. PROPOSED CURB ELEVATIONS SPECIFIED HEREON ARE FINISH GRADE GUTTER LINE ELEVATIONS. ALL PROPOSED ELEVATIONS HAVE BEEN CALCULATED UTILIZING BEST AVAILABLE SURVEY DATA OF EXISTING CENTERLINE AND EDGE OF CARTWAY ELEVATION SHOTS AT THE TIME OF DESIGN. CONTRACTOR SHALL VERIFY EXISTING CENTERLINE AND EDGE OF CARTWAY ELEVATION SHOTS PRIOR TO ANY AND ALL CONSTRUCTION.

10. BENCHMARK: EXISTING CONCRETE MONUMENT, ELEVATION= 262.92

11. WHEREVER PHYSICAL LIMITATIONS RESULT IN NOT SATISFYING THE REQUIRED 18 INCH MINIMUM CLEARANCE BETWEEN PUBLIC WATER FACILITIES AND ANY OTHER UTILITY (i.e. STORM, SANITARY, ETC.), 6" THICK FULL CONCRETE ENCASEMENT SHALL BE PROVIDED AS FOLLOWS:

a) FOR CONFLICTS BETWEEN WATER AND SANITARY SEWER, INCLUDING LATERALS AND SERVICES, THE SANITARY SEWER SHALL BE ENCASED FOR A MINIMUM DISTANCE OF TEN (10) FEET ON BOTH SIDES OF THE WATER LINE.

b) FOR CONFLICTS BETWEEN WATER AND STORM SEWER, INCLUDING SERVICES, THE WATER LINE SHALL BE ENCASED FOR A MINIMUM DISTANCE ON TEN (10) FEET OF BOTH SIDES OF THE STORM SEWER.

c) FOR CONFLICTS BETWEEN SANITARY SEWER AND STORM SEWER, INCLUDING LATERALS, THE SANITARY LINE SHALL BE ENCASED FOR A MINIMUM DISTANCE ON TEN (10) FEET OF BOTH SIDES OF THE STORM SEWER.

12. AN 18 INCH VERTICAL CLEARANCE OR A 10 FOOT HORIZONTAL CLEARANCE SHALL BE MAINTAINED BETWEEN ALL SANITARY SEWER AND WATER LINES, INCLUDING LATERALS AND SERVICES WHERE POSSIBLE TO MAINTAIN HORIZONTAL CLEARANCE, AN 18 INCH VERTICAL CLEARANCE MUST BE MAINTAINED AND SANITARY AND WATER LINES MUST BE CONSTRUCTED IN SEPARATE OR BENCHED TRENCHES.

13. TOP OF GRATE AND RIM ELEVATIONS SPECIFIED HEREON ARE FROM CENTER OF STRUCTURE. CONTRACTOR IS RESPONSIBLE FOR PROJECTING THE ROADWAY/PARKING GRADE ALONG THE LENGTH OF THE STRUCTURE.

14. SPOT ELEVATIONS AT FACE OF CURB REPRESENT FINISH GRADE AT BOTTOM OF CURB FACE REVEAL.

15. ANY AND ALL FILL SHALL BE PLACED PER THE RECOMMENDATIONS OF THE GEO-TECHNICAL CONSULTANT.

16. ALL PROPOSED HDPEP SHALL BE SMOOTH BORE INTERIOR. THERMO-PLASTIC PIPE CAN BE SUBSTITUTED WITH THE APPROVAL OF WHITPAIN TOWNSHIP.

17. ALL INLETS GRATES SHALL BE PEDESTRIAN SAFE STRUCTURAL STEEL.

18. PAVEMENT AND STONE SUBBASE SHALL BE PLACED ON A PREPARED SUBGRADE, FREE OF SOFT, MUDDY, OR FROZEN AREAS. SUCH UNSATISFACTORY SOFT AREAS SHALL BE CORRECTED BY SCARIFYING, RESHAPING, AND RE-COMPACTING EXISTING MATERIAL, OR BY REPLACING SOFT MATERIAL WITH STABLE, SUITABLE MATERIAL. UNSATISFACTORY MATERIAL SHALL BE REPLACED WHEN DIRECTED BY THE TOWNSHIP ENGINEER. IT SHALL BE THE RESPONSIBILITY OF THE CONTRACTOR TO VERIFY REQUIRED STABILITY OF SUBGRADE THROUGH COMPACTION TESTING SUITABLE TO THE TOWNSHIP ENGINEER. PRIOR TO PLACEMENT OF THE WEARING COURSE, A TACK COAT CONFORMING TO PUBLICATION 408, SECTION 460.3, SHALL BE APPLIED TO THE BITUMINOUS BASE COURSE (OR BINDER COURSE, WHERE APPROVED) WHEN DIRECTED BY THE TOWNSHIP ENGINEER.

19. WHERE UTILITY INSTALLATION OCCURS, THE EXACT EXTENT OF ROAD MAINTENANCE AND REPAIR SHALL BE DETERMINED BY THE RECOMMENDATION OF THE TOWNSHIP ENGINEER.

20. A TEN (10) FOOT HORIZONTAL SEPARATION SHALL BE MAINTAINED BETWEEN THE PROPOSED SEWER (INCLUDING LATERALS) AND ALL LANDSCAPING.

21. A TEN (10) FOOT HORIZONTAL SEPARATION SHALL BE MAINTAINED BETWEEN THE PROPOSED WATER FACILITIES (INCLUDING SERVICES) AND ALL LANDSCAPING.

22. A MINIMUM SLOPE OF 2% SHALL BE PROVIDED FOR SEWER LATERALS.

23. THE WATER AND SANITARY SEWER SYSTEMS SHALL BE INSTALLED IN ACCORDANCE WITH THE APPLICABLE AUTHORITIES AND WHITPAIN TOWNSHIP STANDARDS, RESPECTIVELY.

24. SANITARY SEWER AND WATER SERVICE LINES SHALL MAINTAIN A MINIMUM COVER OF 3 1/2'.

25. ALL TOP SOIL AND FILL MATERIAL IMPORTED TO THIS SITE BY THE CONTRACTOR OR HIS SUBCONTRACTOR(S) SHALL STRICTLY COMPLY WITH THE REQUIREMENTS OF THE DEP "CLEAN FILL POLICY" WHICH ARE IN EFFECT AT THE TIME OF THE FILL IMPORT. NO TOPSOIL SHALL BE REMOVED FROM THIS SITE EXCEPT FOR PROVIDING SOIL AMENDMENTS.

26. THE CONTRACTOR SHALL HAVE A PREPAREDNESS PREVENTION AND CONTINGENCY (PPC) PLAN ON SITE AT ALL TIMES.

28. STORM AND SANITARY SEWER LENGTHS AND SLOPES ARE MEASURED FROM CENTER OF STRUCTURE TO CENTER OF STRUCTURE.

29. WHITPAIN TOWNSHIP SHALL OWN AND MAINTAIN THE FIELDS, PARKING LOT, ROADS, AND ALL ASSOCIATED STORMWATER MANAGEMENT FACILITIES.

PENNSYLVANIA ONE CALL SYSTEM, INC. 1-800-242-1776 STOP - CALL BEFORE YOU DIG

LOCATIONS OF ALL EXISTING UTILITIES SHOWN HEREON HAVE BEEN DEVELOPED FROM UTILITY COMPANY RECORDS AND/OR ABOVE-GROUND INSPECTION OF THE SITE. COMPLETENESS OR ACCURACY OF TYPE, SIZE, DEPTH OR HORIZONTAL LOCATION OF UNDERGROUND FACILITIES OR STRUCTURES CANNOT BE GUARANTEED. PURSUANT TO REQUIREMENTS OF THE PENNSYLVANIA LEGISLATIVE ACT NUMBER 38, CONTRACTORS MUST VERIFY LOCATION AND DEPTH OF ALL UNDERGROUND UTILITIES AND FACILITIES PRIOR TO START OF WORK. SERIAL NUMBER 20110671016.

HIBBELN ENGINEERING COMPANY, L.L.C.
CONSULTING ENGINEERS
215·619·9070 PA, NJ, MD & DE
593 Skippack Pike, Suite 300
Blue Bell, Pennsylvania 19422
www.hibbelnengineering.com
IN CONJUNCTION WITH:
LandConcepts
593 Skippack Pike • Suite 300 • Blue Bell, PA 19422

COOK TRACT ATHLETIC FIELDS

PREPARED FOR
WHITPAIN TOWNSHIP
SITE SITUATE IN
WHITPAIN TOWNSHIP
MONTGOMERY COUNTY, PENNSYLVANIA

ALL DOCUMENTS PREPARED BY HIBBELN ENGINEERING COMPANY, L.L.C. ARE INSTRUMENTS OF SERVICE IN RESPECT OF THE PROJECT. THEY ARE NOT INTENDED OR REPRESENTED TO BE SUITABLE FOR REUSE BY OWNER OR OTHERS ON EXTENSIONS OF THE PROJECT OR ON ANY OTHER PROJECT. ANY REUSE WITHOUT WRITTEN VERIFICATION OR ADAPTATION BY HIBBELN ENGINEERING COMPANY, L.L.C. FOR THE SPECIFIC PURPOSE INTENDED WILL BE AT OWNERS SOLE RISK AND WITHOUT LIABILITY OR LEGAL EXPOSURE TO HIBBELN ENGINEERING COMPANY, L.L.C.; AND OWNER SHALL INDEMNIFY AND HOLD HARMLESS HIBBELN ENGINEERING COMPANY, L.L.C. FROM ALL CLAIMS, DAMAGES, LOSSES AND EXPENSES ARISING OUT OF OR RESULTING THEREFROM.

NO.	REVISIONS	DATE
6	PER ADDITION OF SEDIMENT BASIN B PHASE 4 PLAN	JUNE 18, 2012
5	PER MCCD LETTER (2-9-12)	FEBRUARY 10, 2012
4	PER STORM SYTEM 'B'	JANUARY 31, 2012
3	PER MCCD LETTER (1/3/12)	JANUARY 5, 2012
2	PER SANITARY SEWER RELOCATION	DECEMBER 19, 2011
1	100% COMPLETION PLAN	NOVEMBER 22, 2011
	PLAN ORIGINATION DATE	AUGUST 26, 2011

HIBBELN ENGINEERING COMPANY, L.L.C. CONSULTING ENGINEERS

STORM SEWER 'C' AND 'D' PLAN AND PROFILE

COOK TRACT ATHLETIC FIELDS
SITE SITUATE IN
WHITPAIN TOWNSHIP
MONTGOMERY COUNTY, PENNSYLVANIA

PROJECT MANAGER: DSC/AJH	DRAFTED BY: JBS
PROJECT NUMBER: 12460	DRAWING FILE: #12460_SHT13-21
PLAN SCALE: HORIZ.: 1" = 50' VERT.: 1" = 5'	PLAN SHEET NUMBER 17 OF 38

0' 25' 50' 100'
GRAPHIC SCALE

LEGEND

- EXISTING CONTOUR
- EXISTING INDEX CONTOUR
- EXISTING TREE CANOPY
- INFILTRATION TEST LOCATION
- EXISTING WETLANDS
- PROPOSED PAVEMENT
- PROPOSED 8' WIDE 2"TH STONE DUST ON 4"TH MIN. MILLINGS TRAIL
- PROPOSED 6"TH MILLINGS PARKING AREA
- PROPOSED CONTOUR
- PROPOSED INDEX CONTOUR
- PROPOSED TREE CLEAR LINE
- TURF REINFORCEMENT MAT
- INFILTRATION BASIN SEEDING
- SOIL AMENDMENT
- IRRIGATION TANK WATER TRANSFER LINE
- WATER
- ELECTRIC
- STORM SEWER
- SANITARY SEWER
- RIP-RAP APRON

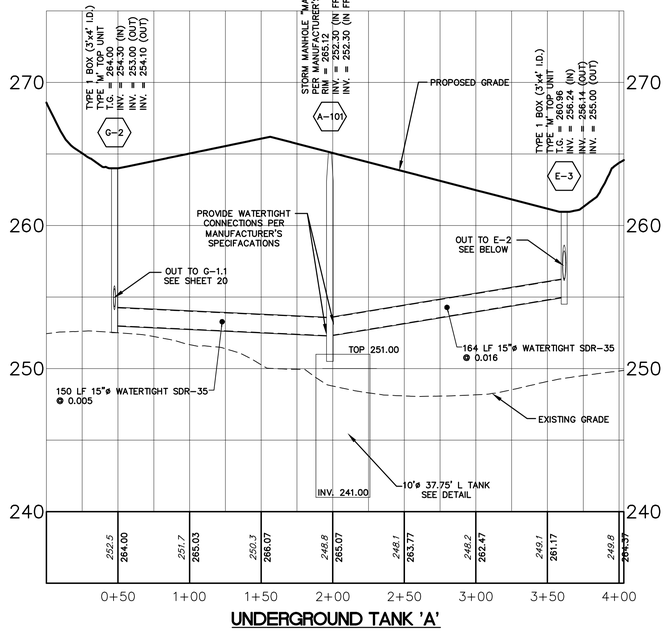

UNDERGROUND TANK 'A'

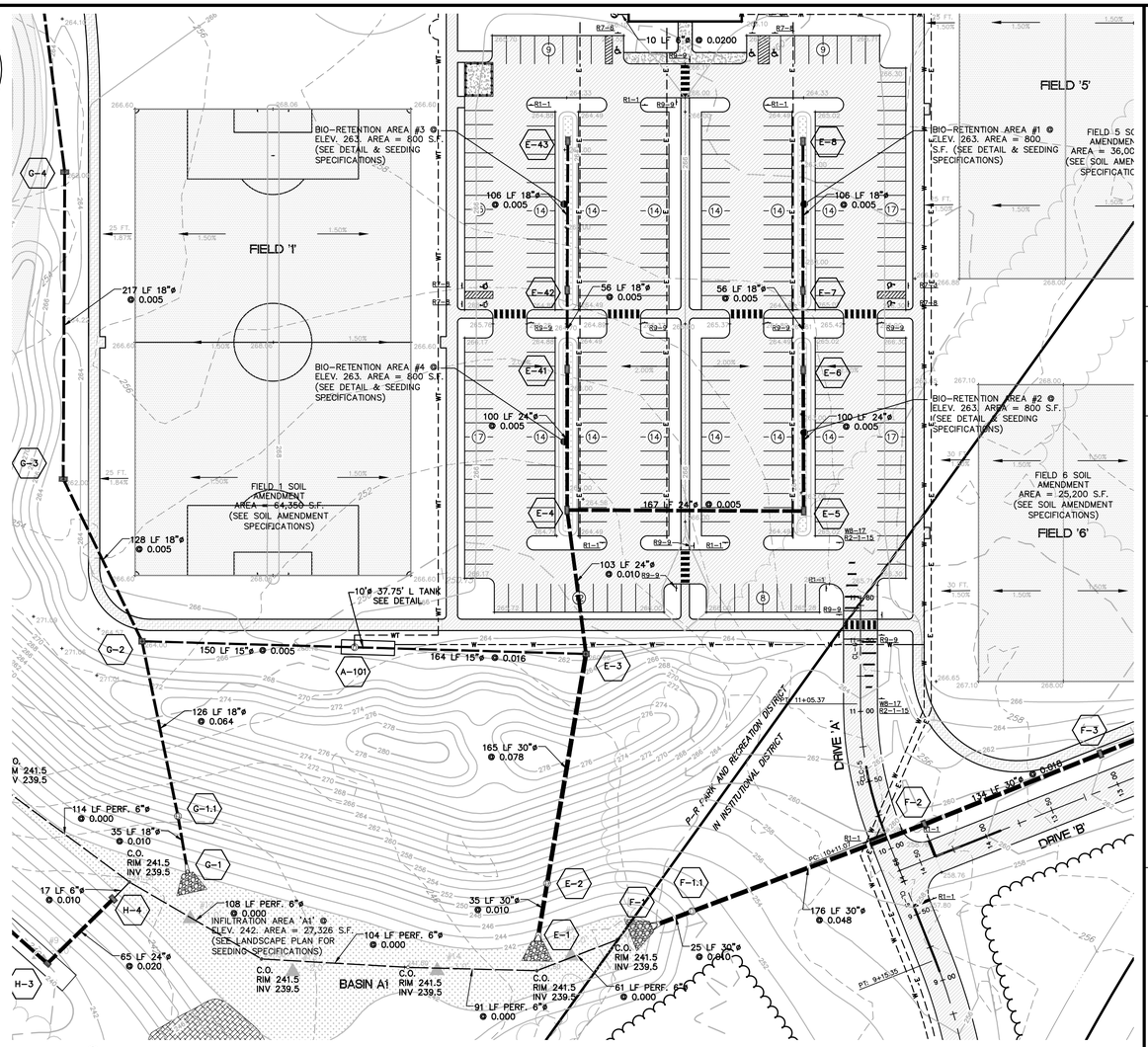

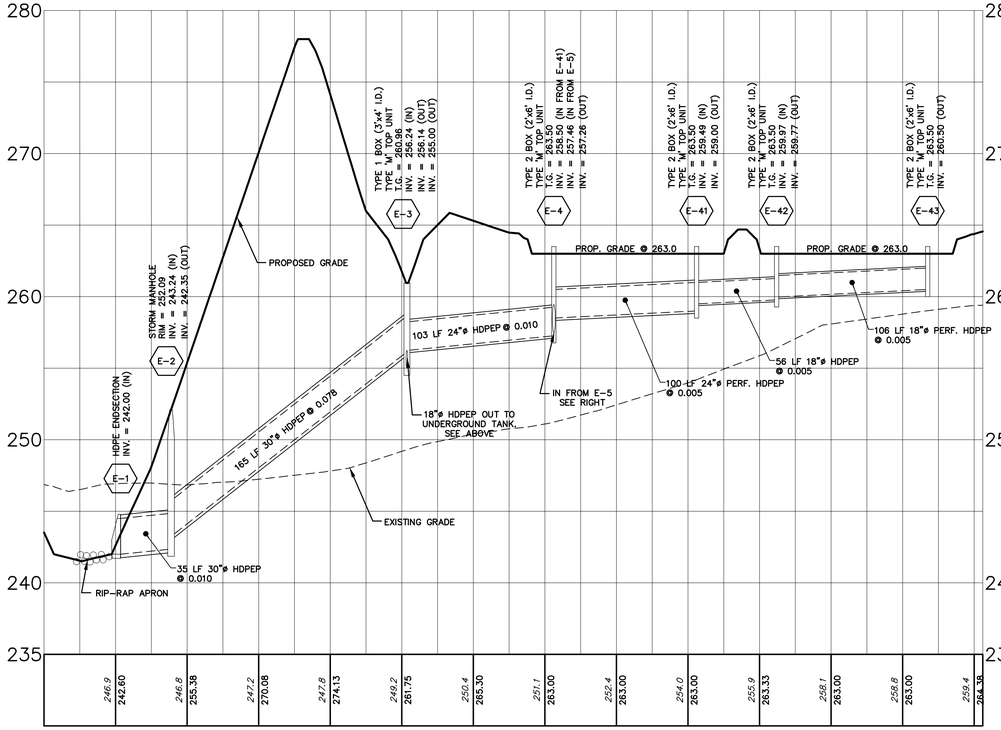

STORM SEWER PROFILE E-1 TO E-43

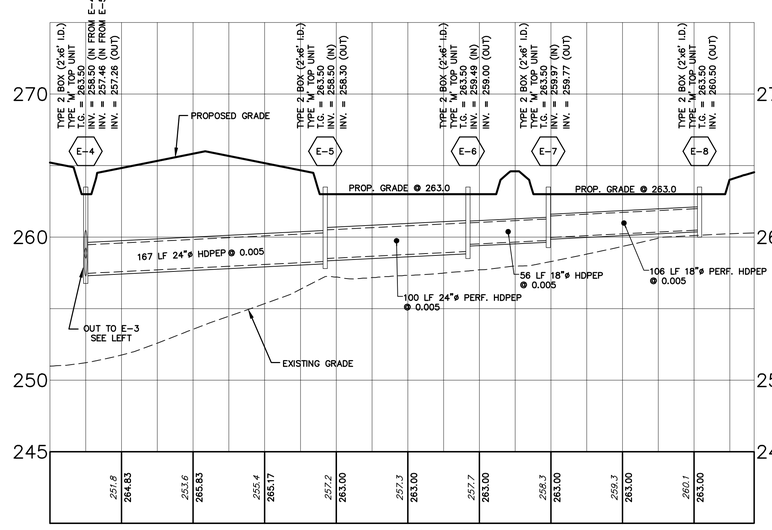

STORM SEWER PROFILE E-4 TO E-8

LOCATIONS OF ALL EXISTING UTILITIES SHOWN HEREON HAVE BEEN DEVELOPED FROM UTILITY COMPANY RECORDS AND/OR ABOVE-GROUND INSPECTION OF THE SITE. COMPLETENESS OR ACCURACY OF TYPE, SIZE, DEPTH OR HORIZONTAL LOCATION OF UNDERGROUND FACILITIES OR STRUCTURES CANNOT BE GUARANTEED. PURSUANT TO REQUIREMENTS OF THE PENNSYLVANIA LEGISLATIVE ACT NUMBER 38, CONTRACTORS MUST VERIFY LOCATION AND DEPTH OF ALL UNDERGROUND UTILITIES AND FACILITIES PRIOR TO START OF WORK. SERIAL NUMBER 20110671016.

HIBBELN ENGINEERING COMPANY, L.L.C.
CONSULTING ENGINEERS
215-619-9070 PA, NJ, MD & DE
593 Skippack Pike, Suite 300
Blue Bell, Pennsylvania 19422
www.hibbelnengineering.com
IN CONJUNCTION WITH:
Land Concepts
593 Skippack Pike • Suite 300 • Blue Bell, PA 19422

COOK TRACT ATHLETIC FIELDS

PREPARED FOR
WHITPAIN TOWNSHIP
SITE SITUATE IN
WHITPAIN TOWNSHIP
MONTGOMERY COUNTY, PENNSYLVANIA

NO.	REVISIONS	DATE
1	100% COMPLETION PLAN	AUGUST 26, 2011
2	PER PLANNING COMMISSION REVIEW	NOVEMBER 22, 2011
3	PER MCCD LETTER (12/2/12)	JANUARY 8, 2012
4	PER STORM SYSTEM 'B'	JANUARY 31, 2012
5	PER MCCD LETTER (2-3-12)	FEBRUARY 10, 2012
6	PER ADDITION OF SEGMENT BASIN B PHASE 4 PLAN	JUNE 18, 2012

THE ENGINEERING DESIGNS & DRAWINGS CONTAINED IN THESE DOCUMENTS ARE THE PROPERTY OF THE ENGINEER OF RECORD AND ARE NOT TO BE USED IN WHOLE OR IN PART FOR ANY OTHER PROJECT WITHOUT THE WRITTEN AUTHORIZATION OF THE ENGINEER OF RECORD. ANY UNAUTHORIZED USE OF THESE DESIGNS & DRAWINGS WILL BE AT THE SOLE RISK AND RESPONSIBILITY OF THE PERSON OR ENTITY USING THE DESIGNS & DRAWINGS. BY USING THESE DESIGNS & DRAWINGS, THE USER AGREES TO INDEMNIFY AND HOLD HARMLESS THE ENGINEER OF RECORD FROM ANY AND ALL LIABILITY ARISING OUT OF THE USE OF THESE DESIGNS & DRAWINGS, INCLUDING, BUT NOT LIMITED TO, CLAIMS BROUGHT AGAINST THE ENGINEER OF RECORD BY THIRD PARTIES.

HIBBELN ENGINEERING COMPANY, L.L.C.
CONSULTING ENGINEERS

STORM SEWER 'E' PLAN AND PROFILE

COOK TRACT ATHLETIC FIELDS
SITE SITUATE IN
WHITPAIN TOWNSHIP
MONTGOMERY COUNTY, PENNSYLVANIA

PROJECT MANAGER:	DRAFTED BY:
DSC/AJH	JBS
PROJECT NUMBER:	DRAWING FILE:
12460	#12460_SHT13-21
PLAN SCALE: HORIZ.: 1" = 50' VERT.: 1" = 5'	PLAN SHEET NUMBER 18 OF 38

0' 25' 50' 100'
GRAPHIC SCALE

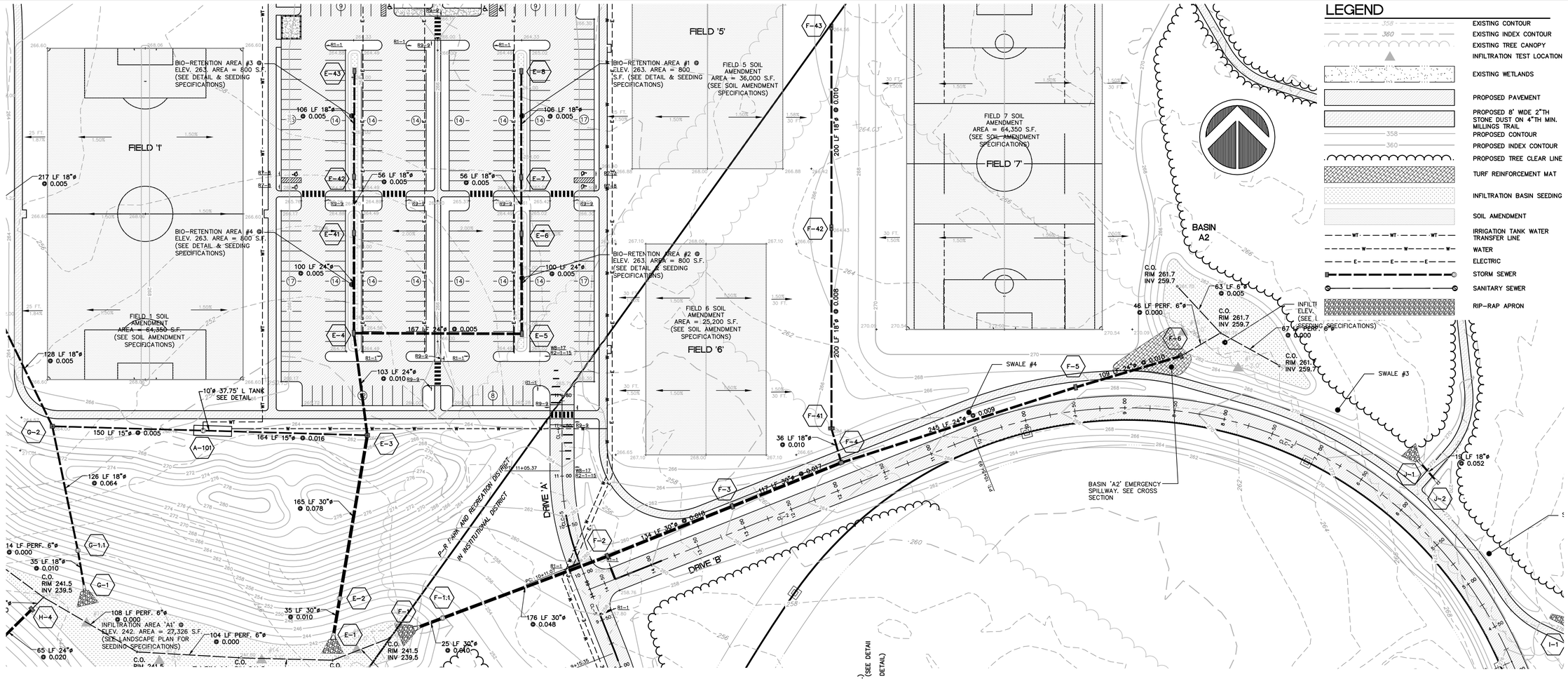

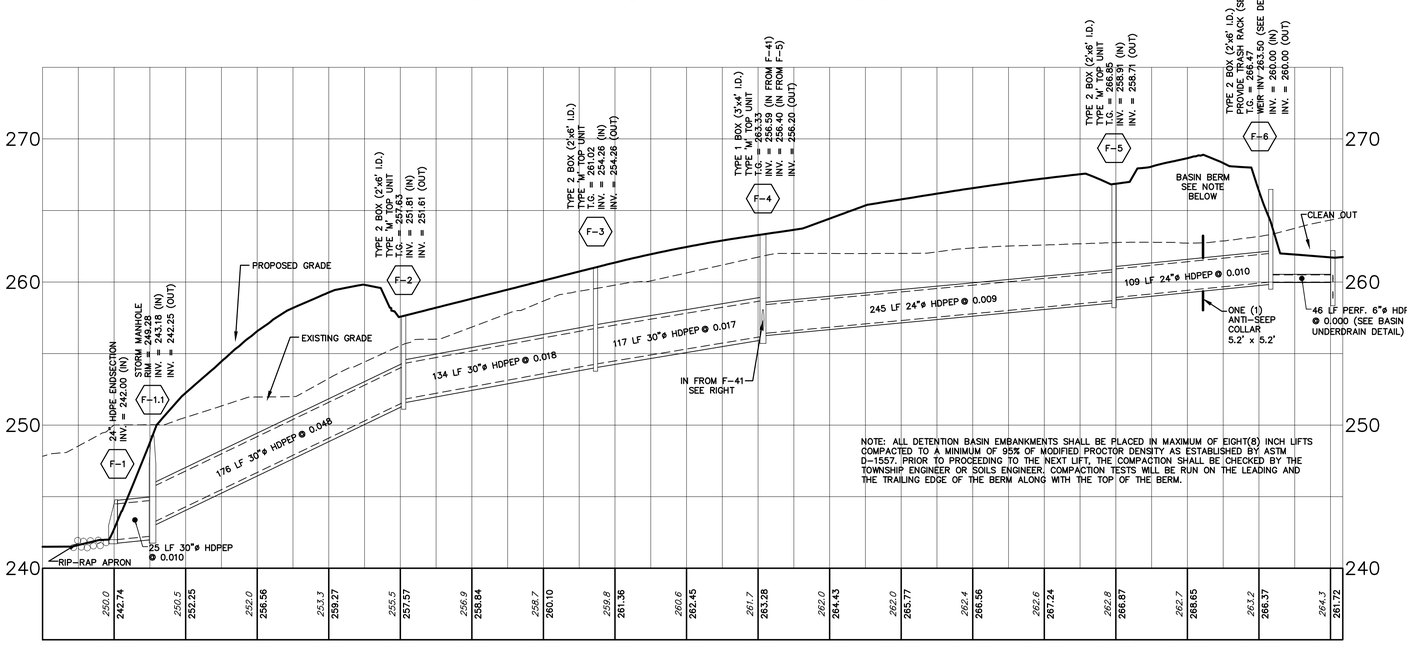

STORM SEWER PROFILE F-1 TO F-6

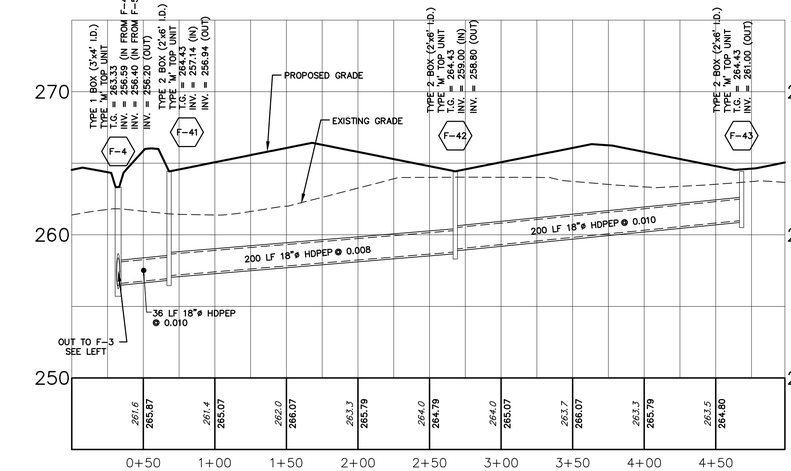

STORM SEWER PROFILE F-4 TO F-43

HIBBELN ENGINEERING COMPANY, L.L.C.
CONSULTING ENGINEERS
215-619-9070 PA, NJ, MD & DE
593 Skippack Pike, Suite 300
Blue Bell, Pennsylvania 19422
www.hibbelnengineering.com
IN CONJUNCTION WITH:
Land Concepts
593 Skippack Pike • Suite 300 • Blue Bell, PA 19422

COOK TRACT ATHLETIC FIELDS

PREPARED FOR
WHITPAIN TOWNSHIP
SITE SITUATE IN
WHITPAIN TOWNSHIP
MONTGOMERY COUNTY, PENNSYLVANIA

NO.	REVISIONS	DATE
1	TOWN COMPLETION PLAN	AUGUST 26, 2011
2	PER ADDITION OF SEGMENT BASIN B PHASE 4 PLAN	JUNE 18, 2012
3	PER MCCD LETTER (12-9-12)	FEBRUARY 15, 2012
4	PER STORM SYSTEM 'B'	JANUARY 31, 2012
5	PER MCCD LETTER (1/7/12)	JANUARY 5, 2012
6	PER REVISED BASIN LOCATION	NOVEMBER 22, 2011

PLAN ORIGINATION DATE

© COPYRIGHT HIBBELN ENGINEERING COMPANY, L.L.C. ALL RIGHTS RESERVED. THIS PLAN IS THE PROPERTY OF HIBBELN ENGINEERING COMPANY, L.L.C. AND IS NOT TO BE USED IN WHOLE OR IN PART FOR ANY PROJECT OTHER THAN THE ONE FOR WHICH IT WAS PREPARED, NOR IS IT TO BE LOANED, COPIED OR REPRODUCED WITHOUT THE WRITTEN CONSENT OF HIBBELN ENGINEERING COMPANY, L.L.C. ANY UNAUTHORIZED USE OF THIS PLAN WILL BE AT THE SOLE RISK OF THE USER.

HIBBELN ENGINEERING COMPANY, L.L.C.
CONSULTING ENGINEERS

STORM SEWER 'F' PLAN AND PROFILE

COOK TRACT ATHLETIC FIELDS
SITE SITUATE IN
WHITPAIN TOWNSHIP
MONTGOMERY COUNTY, PENNSYLVANIA

PROJECT MANAGER: DSC/AJH	DRAFTED BY: JBS
PROJECT NUMBER: 12460	DRAWING FILE: #12460_SHT13-21
PLAN SCALE: HORIZ.: 1" = 50' VERT.: 1" = 5'	PLAN SHEET NUMBER 19 OF 38

0' 25' 50' 100'
GRAPHIC SCALE

LEGEND

- EXISTING CONTOUR
- EXISTING INDEX CONTOUR
- EXISTING TREE CANOPY
- INFILTRATION TEST LOCATION
- EXISTING WETLANDS
- PROPOSED PAVEMENT
- PROPOSED 8' WIDE 2"TH STONE DUST ON 4"TH MIN. MILLINGS TRAIL
- PROPOSED 6"TH MILLINGS PARKING AREA
- PROPOSED CONTOUR
- PROPOSED INDEX CONTOUR
- PROPOSED TREE CLEAR LINE
- TURF REINFORCEMENT MAT
- INFILTRATION BASIN SEEDING
- SOIL AMENDMENT
- IRRIGATION TANK WATER TRANSFER LINE
- WATER
- ELECTRIC
- STORM SEWER
- SANITARY SEWER
- RIP-RAP APRON

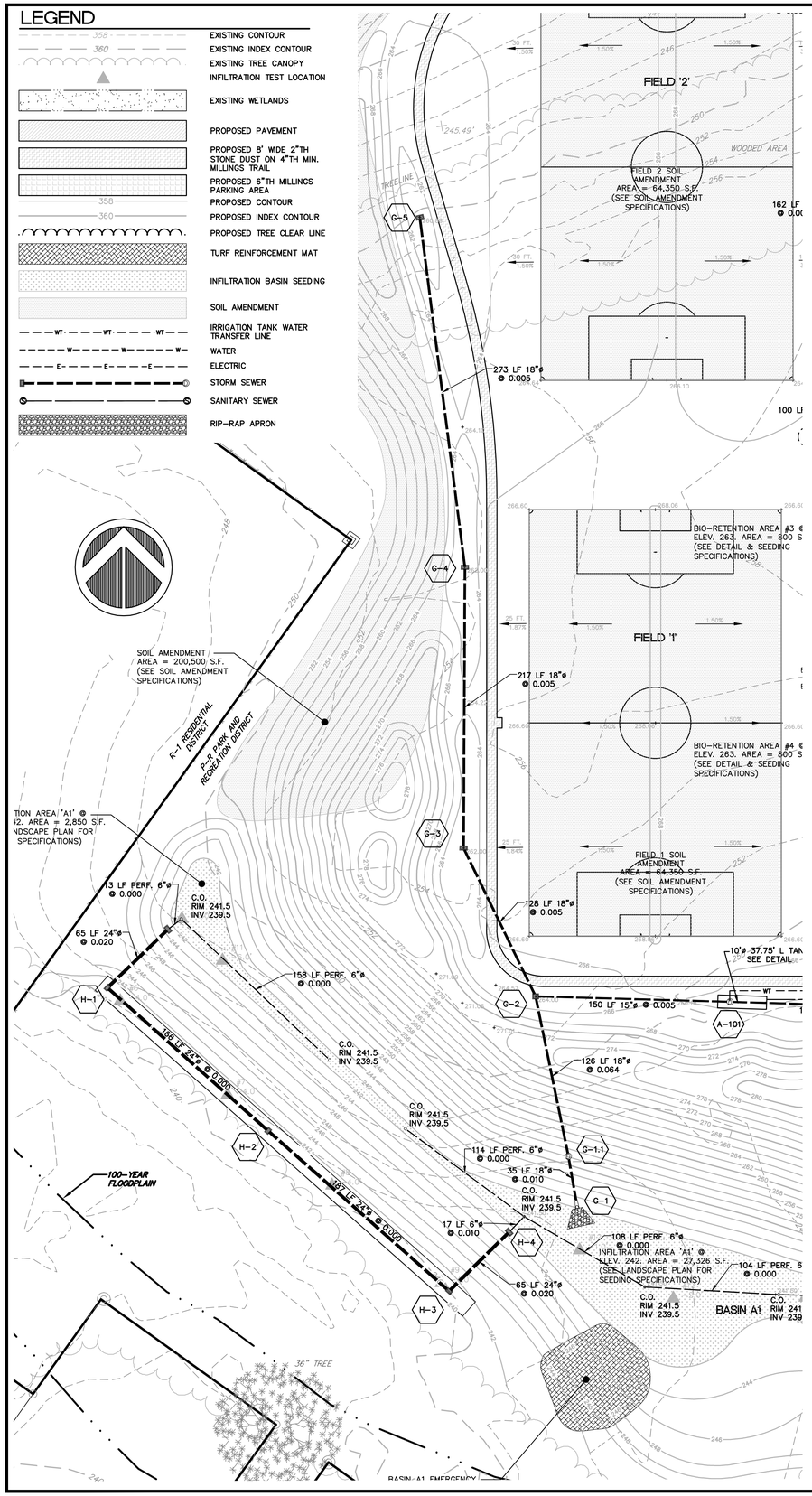

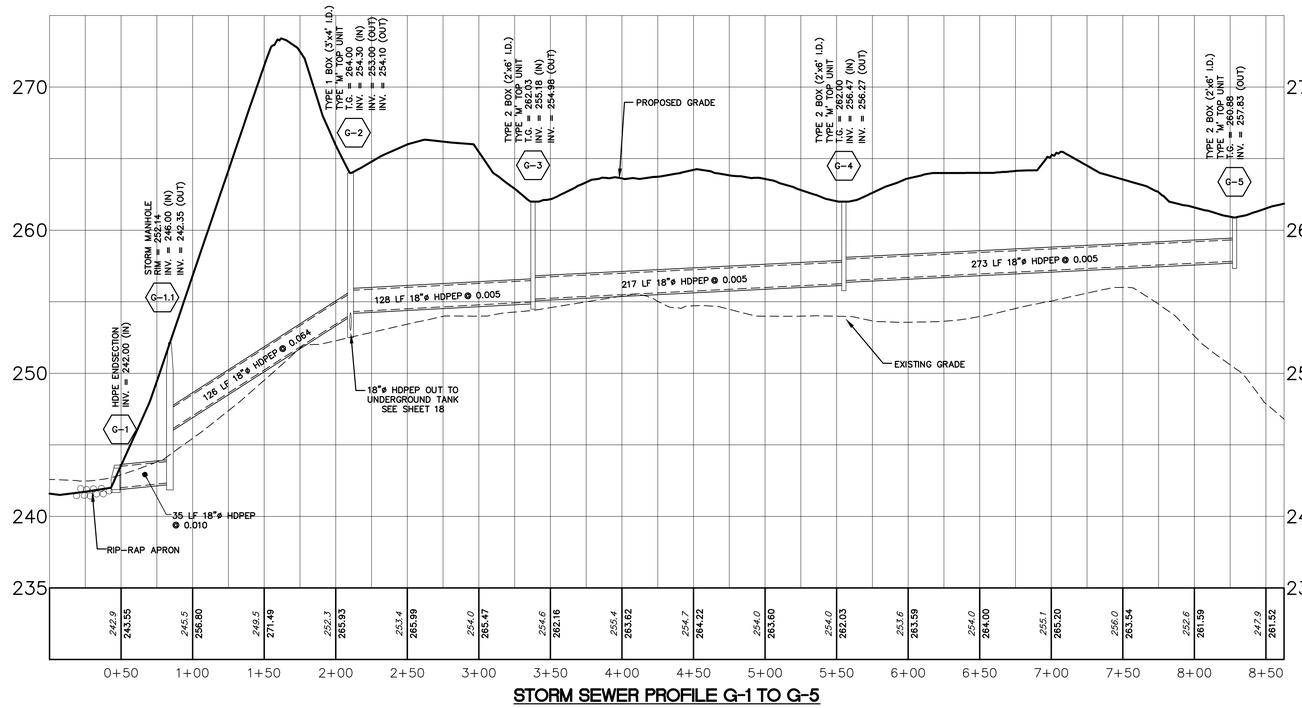

STORM SEWER PROFILE G-1 TO G-5

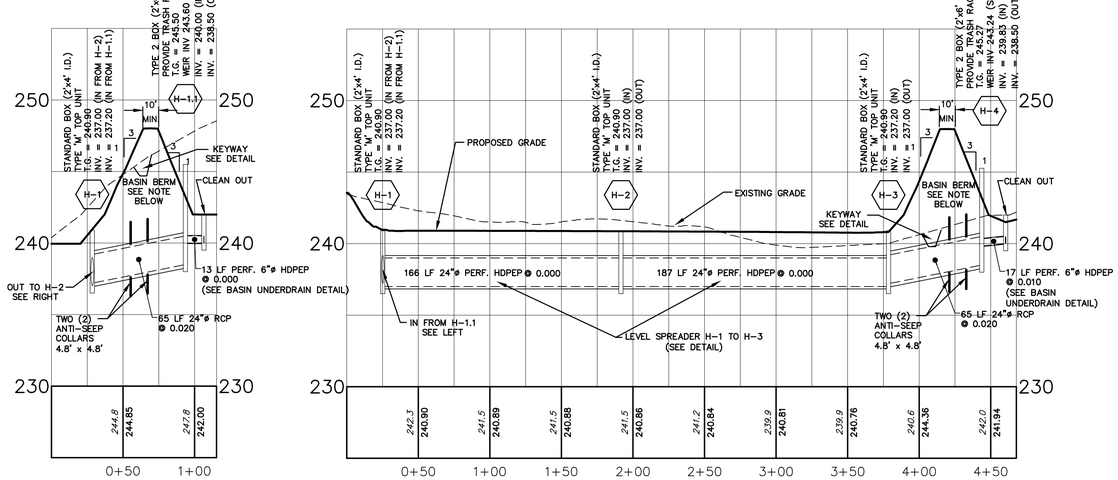

STORM SEWER PROFILE H-1 TO H-1.1

STORM SEWER PROFILE H-1 TO H-6

NOTE: ALL DETENTION BASIN EMBANKMENTS SHALL BE PLACED IN MAXIMUM OF EIGHT(8) INCH LIFTS COMPACTED TO A MINIMUM OF 95% OF MODIFIED PROCTOR DENSITY AS ESTABLISHED BY ASTM D-1557. PRIOR TO PROCEEDING TO THE NEXT LIFT, THE COMPACTION SHALL BE CHECKED BY THE TOWNSHIP ENGINEER OR SOILS ENGINEER. COMPACTION TESTS WILL BE RUN ON THE LEADING AND THE TRAILING EDGE OF THE BERM ALONG WITH THE TOP OF THE BERM.

LOCATIONS OF ALL EXISTING UTILITIES SHOWN HEREON HAVE BEEN DEVELOPED FROM UTILITY COMPANY RECORDS AND/OR ABOVE-GROUND INSPECTION OF THE SITE. COMPLETENESS OR ACCURACY OF TYPE, SIZE, DEPTH OR HORIZONTAL LOCATION OF UNDERGROUND FACILITIES OR STRUCTURES CANNOT BE GUARANTEED. PURSUANT TO REQUIREMENTS OF THE PENNSYLVANIA LEGISLATIVE ACT NUMBER 38, CONTRACTORS MUST VERIFY LOCATION AND DEPTH OF ALL UNDERGROUND UTILITIES AND FACILITIES PRIOR TO START OF WORK. SERIAL NUMBER 20110671016.

HIBBELN ENGINEERING COMPANY, L.L.C.
CONSULTING ENGINEERS
215-619-9070 PA, NJ, MD & DE
593 Skippack Pike, Suite 300
Blue Bell, Pennsylvania 19422
www.hibbelnengineering.com
IN CONJUNCTION WITH:
Land Concepts
593 Skippack Pike • Suite 300 • Blue Bell, PA 19422

COOK TRACT ATHLETIC FIELDS

PREPARED FOR
WHITPAIN TOWNSHIP
SITE SITUATE IN
WHITPAIN TOWNSHIP
MONTGOMERY COUNTY, PENNSYLVANIA

NO.	REVISIONS	PLAN ORIGINATION DATE
1	TOOK COMPLETION PLAN	AUGUST 26, 2011
2	PER SOIL EVALUATION	NOVEMBER 22, 2011
3	PER MCCD LETTER (1/27/12)	JANUARY 5, 2012
4	PER STORM SYSTEM 'G'	JANUARY 31, 2012
5	PER MCCD LETTER (2-9-12)	FEBRUARY 10, 2012
6	PER ADDITION OF SEDIMENT BASIN 8 PHASE 4 PLAN	JUNE 18, 2012

THE ENGINEER'S SEAL APPEARING HEREON IS THE PROPERTY OF HIBBELN ENGINEERING COMPANY, L.L.C. AND IS AFFIXED TO THIS PLAN AS A MATTER OF RECORD ONLY. THE ENGINEER RESERVES ALL RIGHTS TO THE PLAN AND ITS CONTENTS, INCLUDING COPYRIGHT. THE CONTENTS OF THIS PLAN SHALL NOT BE USED BY ANY PERSON FOR ANY PURPOSE OTHER THAN THE SPECIFIC PROJECT FOR WHICH IT WAS PREPARED AND PUBLISHED. NO REPRODUCTION OF THIS PLAN (IN WHOLE OR IN PART) OR ADAPTATION OF THE DESIGNS AND IDEAS CONTAINED HEREIN, SHALL BE MADE BY ANY PERSON, FIRM OR CORPORATION FOR ANY PURPOSE WITHOUT THE PRIOR WRITTEN PERMISSION OF HIBBELN ENGINEERING COMPANY, L.L.C. FIRM

HIBBELN ENGINEERING COMPANY, L.L.C.
CONSULTING ENGINEERS

STORM SEWER 'G' AND 'H' PLAN AND PROFILE

COOK TRACT ATHLETIC FIELDS
SITE SITUATE IN
WHITPAIN TOWNSHIP
MONTGOMERY COUNTY, PENNSYLVANIA

PROJECT MANAGER: DSC/AJH	DRAFTED BY: JBS
PROJECT NUMBER: 12460	DRAWING FILE: #12460_SHT13-21
PLAN SCALE: HORIZ.: 1" = 50' VERT.: 1" = 5'	PLAN SHEET NUMBER: 20 OF 38

0' 25' 50' 100'
GRAPHIC SCALE

PENNSYLVANIA ONE CALL SYSTEM, INC. 1-800-242-1776 — CALL BEFORE YOU DIG

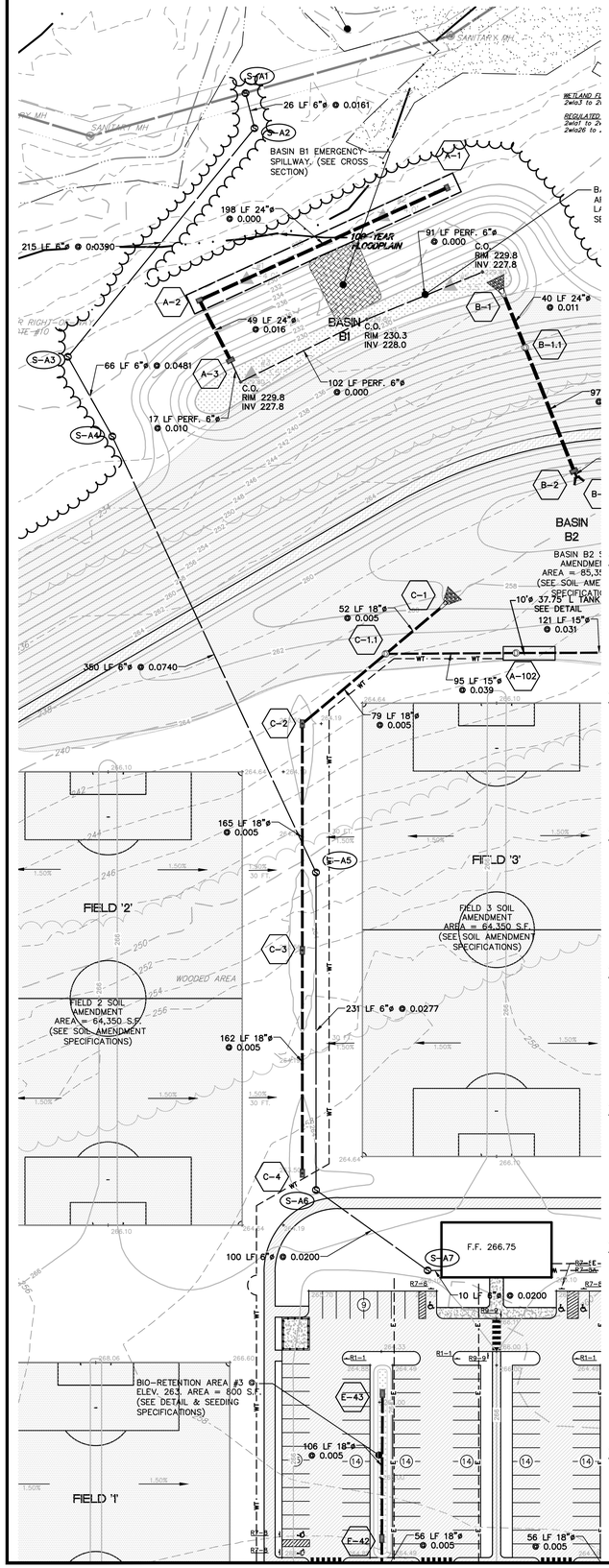

LEGEND

- EXISTING CONTOUR
- EXISTING INDEX CONTOUR
- EXISTING TREE CANOPY
- INFILTRATION TEST LOCATION
- EXISTING WETLANDS
- PROPOSED PAVEMENT
- PROPOSED 8' WIDE 2"TH STONE DUST ON 4"TH MIN. MILLINGS TRAIL
- PROPOSED 6"TH MILLINGS PARKING AREA
- PROPOSED CONTOUR
- PROPOSED INDEX CONTOUR
- PROPOSED TREE CLEAR LINE
- TURF REINFORCEMENT MAT
- INFILTRATION BASIN SEEDING
- SOIL AMENDMENT
- IRRIGATION TANK WATER TRANSFER LINE
- WATER
- ELECTRIC
- STORM SEWER
- SANITARY SEWER
- RIP-RAP APRON

PENNSYLVANIA ONE CALL SYSTEM 1-800-242-1776 STOP - CALL BEFORE YOU DIG!

LOCATIONS OF ALL EXISTING UTILITIES SHOWN HEREON HAVE BEEN DEVELOPED FROM UTILITY COMPANY RECORDS AND/OR ABOVE-GROUND INSPECTION OF THE SITE. COMPLETENESS OR ACCURACY OF TYPE, SIZE, DEPTH OR HORIZONTAL LOCATION OF UNDERGROUND FACILITIES OR STRUCTURES CANNOT BE GUARANTEED. PURSUANT TO REQUIREMENTS OF THE PENNSYLVANIA LEGISLATIVE ACT NUMBER 38, CONTRACTORS MUST VERIFY LOCATION AND DEPTH OF ALL UNDERGROUND UTILITIES AND FACILITIES PRIOR TO START OF WORK. SERIAL NUMBER 20110671016.

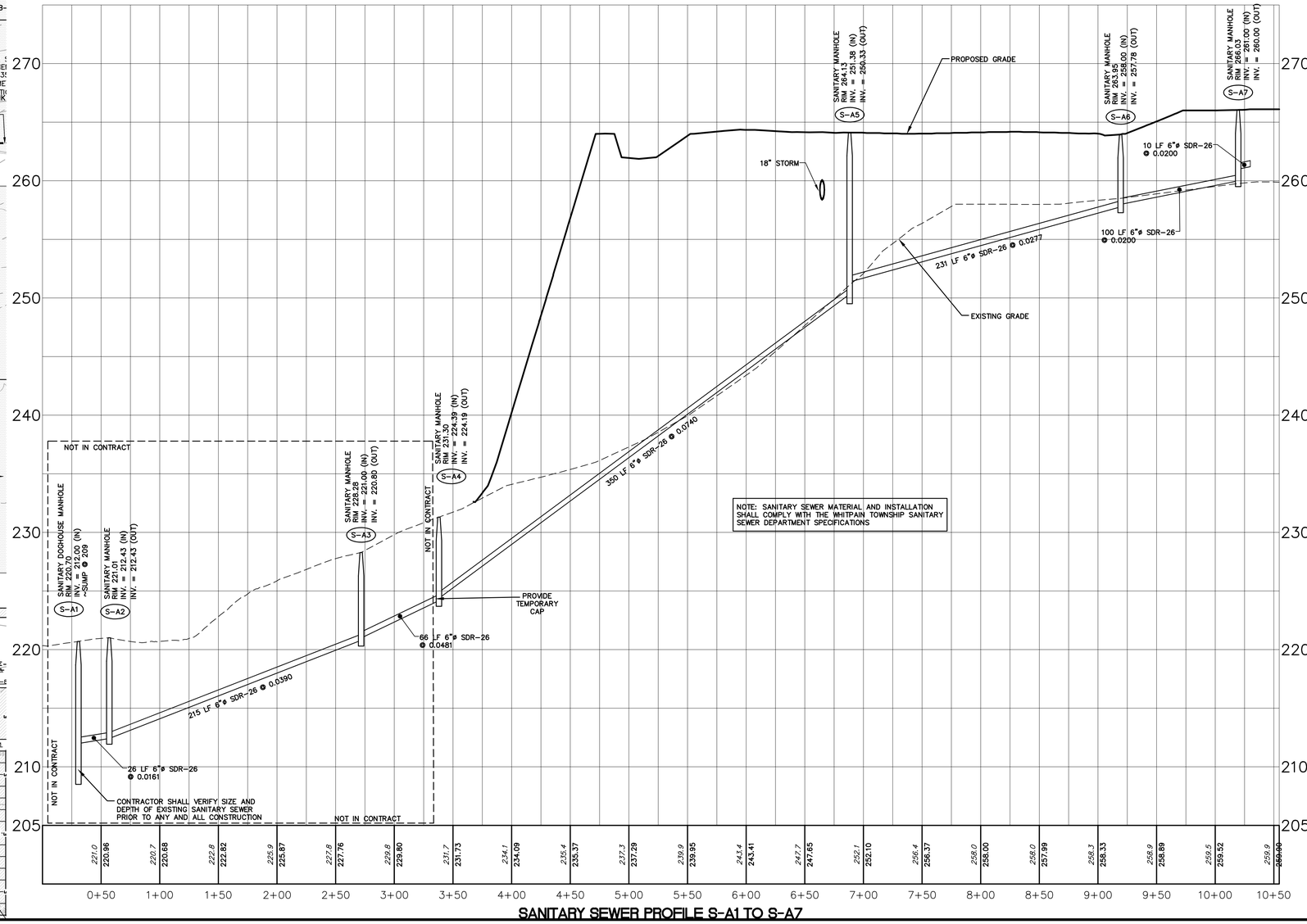

SANITARY SEWER PROFILE S-A1 TO S-A7

HIBBELN ENGINEERING COMPANY, L.L.C.
CONSULTING ENGINEERS
215-619-9070 PA, NJ, MD & DE
593 Skippack Pike, Suite 300
Blue Bell, Pennsylvania 19422
www.hibbelnengineering.com
IN CONJUNCTION WITH:
LandConcepts
593 Skippack Pike • Suite 300 • Blue Bell, PA 19422

COOK TRACT ATHLETIC FIELDS

PREPARED FOR
WHITPAIN TOWNSHIP
SITE SITUATE IN
WHITPAIN TOWNSHIP
MONTGOMERY COUNTY, PENNSYLVANIA

NO.	REVISIONS	DATE
1	100% COMPLETION PLANS	AUGUST 26, 2011
2	PER MCD LETTER (1/31/12)	JANUARY 31, 2012
3	PER MCD LETTER (2-9-12)	FEBRUARY 10, 2012
4	PER STORM SYSTEM 'B'	JANUARY 5, 2012
5	PER MCD LETTER (12/20/11)	JANUARY 5, 2012
6	PER ADDITION OF SEDIMENT BASIN 6 PHASE 4 PLAN	JUNE 18, 2012

THE DRAWINGS, SPECIFICATIONS AND OTHER DOCUMENTS PREPARED BY HIBBELN ENGINEERING COMPANY, L.L.C. ARE INSTRUMENTS OF SERVICE IN CONNECTION WITH THE PROJECT. ALL RIGHTS, INCLUDING COPYRIGHT, IN SUCH INSTRUMENTS OF SERVICE ARE RESERVED BY HIBBELN ENGINEERING COMPANY, L.L.C. AND ARE NOT TO BE USED IN WHOLE OR IN PART BY ANY PERSON OR ENTITY WITHOUT THE WRITTEN PERMISSION OF HIBBELN ENGINEERING COMPANY, L.L.C. AND ITS PRINCIPALS. ANY UNAUTHORIZED USE SHALL BE AT THE SOLE RISK OF THE USER.

HIBBELN ENGINEERING COMPANY, L.L.C.
CONSULTING ENGINEERS

SANITARY SEWER S-A1 TO S-A7 PLAN AND PROFILE

COOK TRACT ATHLETIC FIELDS
SITE SITUATE IN
WHITPAIN TOWNSHIP
MONTGOMERY COUNTY, PENNSYLVANIA

PROJECT MANAGER:	DRAFTED BY:
DSC/AJH	JBS
PROJECT NUMBER:	DRAWING FILE:
12460	#12460_SHT13-21
PLAN SCALE: HORIZ.: 1" = 50' VERT.: 1" = 5'	PLAN SHEET NUMBER 21 OF 38

0' 25' 50' 100'
GRAPHIC SCALE

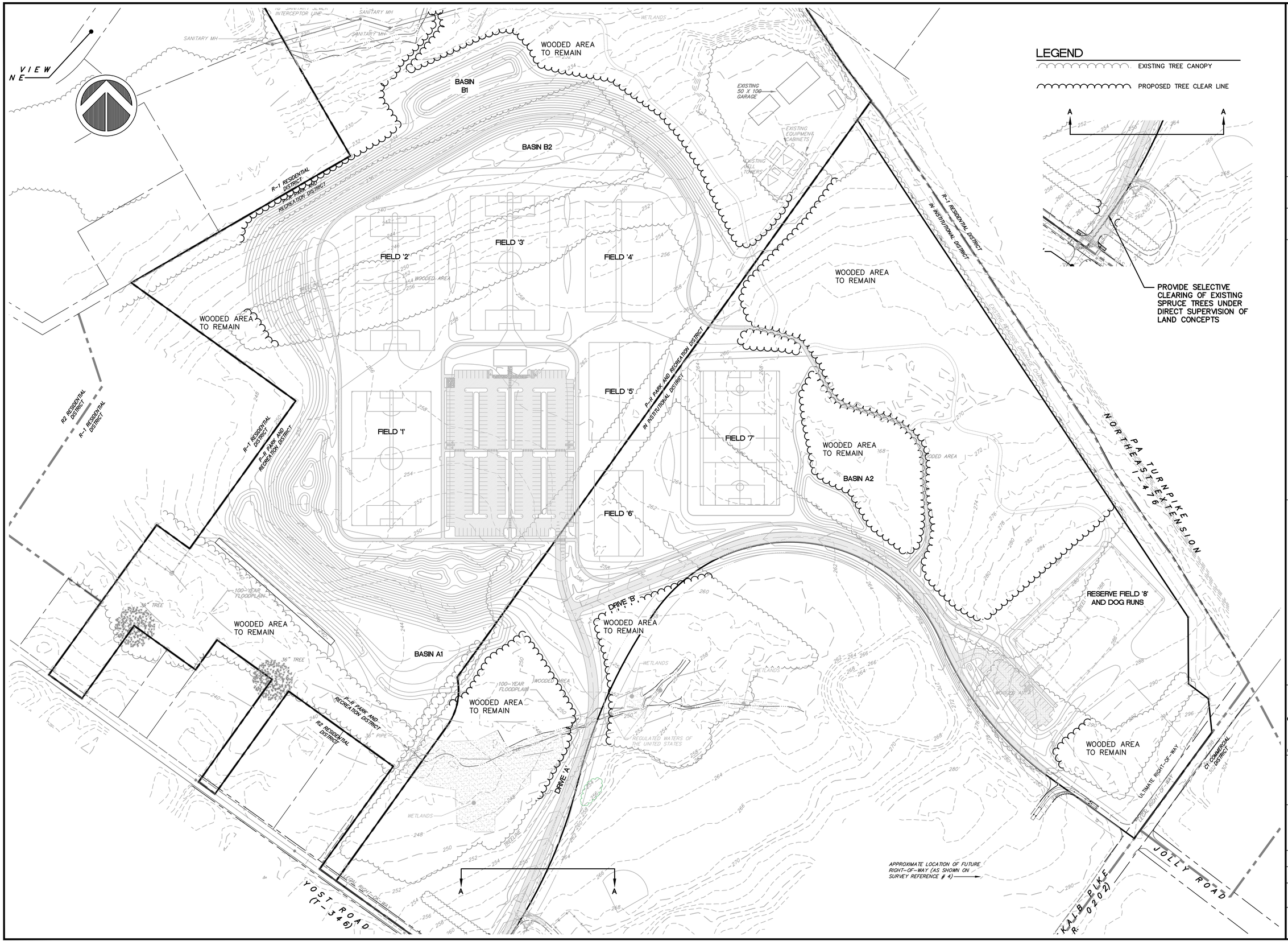

HIBBELN ENGINEERING COMPANY, L.L.C.
CONSULTING ENGINEERS
215-619-9070 PA, NJ, MD & DE
593 Skippack Pike, Suite 300
Blue Bell, Pennsylvania 19422
www.hibbelnengineering.com

IN CONJUNCTION WITH:

LandConcepts
593 Skippack Pike • Suite 300 • Blue Bell, PA 19422

COOK TRACT ATHLETIC FIELDS

PREPARED FOR
WHITPAIN TOWNSHIP

SITE SITUATE IN
WHITPAIN TOWNSHIP
MONTGOMERY COUNTY, PENNSYLVANIA

NO.	REVISIONS	DATE
6	PER ADDITION OF SEDIMENT BASIN B PHASE 4 PLAN	JUNE 18, 2012
5	PER MCCD LETTER (2-9-12)	FEBRUARY 10, 2012
4	PER STORM SYSTEM 'B'	JANUARY 31, 2012
3	PER MCCD LETTER (1/3/12)	JANUARY 5, 2012
2	PER SANITARY SEWER RELOCATION	DECEMBER 19, 2011
1	100% COMPLETION PLAN	NOVEMBER 22, 2011
	PLAN ORIGINATION DATE	AUGUST 26, 2011

HIBBELN ENGINEERING COMPANY, L.L.C.
CONSULTING ENGINEERS

TREE CLEARING PLAN

COOK TRACT
ATHLETIC FIELDS
SITE SITUATE IN
WHITPAIN TOWNSHIP
MONTGOMERY COUNTY, PENNSYLVANIA

PROJECT MANAGER: DSC/AJH	DRAFTED BY: JBS
PROJECT NUMBER: 12460	DRAWING FILE: #12460_SHT22
PLAN SCALE: 1" = 100'	PLAN SHEET NUMBER 22 OF 38

0' 50' 100' 200'
GRAPHIC SCALE

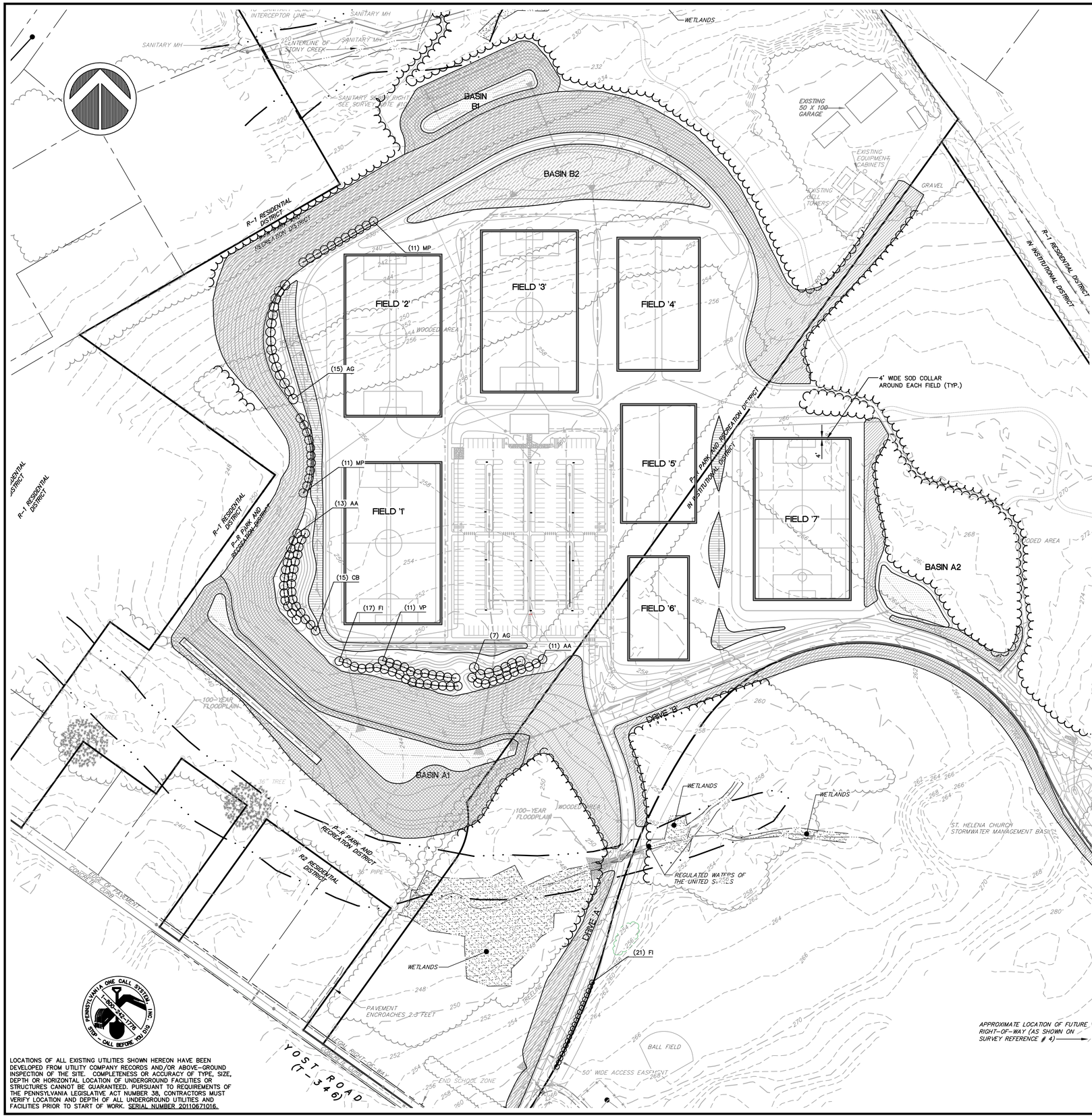

LOCATIONS OF ALL EXISTING UTILITIES SHOWN HEREON HAVE BEEN DEVELOPED FROM UTILITY COMPANY RECORDS AND/OR ABOVE-GROUND INSPECTION OF THE SITE. COMPLETENESS OR ACCURACY OF TYPE, SIZE, DEPTH OR HORIZONTAL LOCATION OF UNDERGROUND FACILITIES OR STRUCTURES CANNOT BE GUARANTEED. PURSUANT TO REQUIREMENTS OF THE PENNSYLVANIA LEGISLATIVE ACT NUMBER 38, CONTRACTORS MUST VERIFY LOCATION AND DEPTH OF ALL UNDERGROUND UTILITIES AND FACILITIES PRIOR TO START OF WORK. SERIAL NUMBER 20110671016.

PLANTING SCHEDULE

SYM.	QTY.	BOTANICAL NAME	COMMON NAME	SIZE
		SHRUBS:		
AA	24	ARONIA ARBUTIFOLIA	RED CHOKEBERRY	24" – 36" HT.
AG	22	ABELIA GRANDIFLORA	GLOSSY ABELIA	24" – 36" HT.
CB	15	CALLICARPA BODINIERI	BEAUTYBERRY	24" – 36" HT.
FI	56	FORSYTHIA INTERMEDIA	FORSYTHIA	24" – 36" HT.
MP	22	MYRICA PENNSYLVANICA	BAYBERRY	24" – 36" HT.
VP	11	VIBURNUM PRAGENSE	PRAGUE VIBURNUM	24" – 36" HT.

SEED MIX LEGEND

NATIVE DETENTION AREA MIX
ERNMX-183
22 LBS/AC.

NATIVE STEEP SLOPE WITH ANNUAL RYEGRASS
ERNMX-181
30 LBS/AC

WARM SEASON GRASS MIX
ERNMX-117
40 LBS/AC.

LOW MAINTENANCE MIX #55141
NATIONAL SEED CO.
4.5 LBS/1,000 S.F.

RAIN GARDEN MIX
ERNMX 180
15 LBS/1,000 S.F.

ATHLETIC FIELDS:
NATIONAL SEED MIX #55128
ATHLETIC TURF (GRAND PRIX)
40% FALCON IV TALL FESCUE
40% SHENANDOAH II TALL FESCUE
10% REVENGE GLX PERENNIAL RYEGRASS
10% BROOKLAWN KENTUCKY BLUEGRASS
7.5 LBS/1,000 S.F.

ALL OTHER AREAS:
70% TALL FESCUE
30% PERENNIAL RYEGRASS
7.5 LBS/1,000 S.F.

HIBBELN ENGINEERING COMPANY, L.L.C.
CONSULTING ENGINEERS
215-619-9070 PA, NJ, MD & DE
593 Skippack Pike, Suite 300
Blue Bell, Pennsylvania 19422
www.hibbelnengineering.com
IN CONJUNCTION WITH:
LandConcepts
593 Skippack Pike • Suite 300 • Blue Bell, PA 19422

COOK TRACT ATHLETIC FIELDS

PREPARED FOR
WHITPAIN TOWNSHIP
SITE SITUATE IN
WHITPAIN TOWNSHIP
MONTGOMERY COUNTY, PENNSYLVANIA

NO.	REVISIONS	DATE
6	PER ADDITION OF SEDIMENT BASIN B PHASE 4 PLAN	JUNE 18, 2012
5	PER MCCD LETTER (2-9-12)	FEBRUARY 10, 2012
4	PER STORM SYSTEM 'B'	JANUARY 31, 2012
3	PER MCCD LETTER (1/3/12)	JANUARY 5, 2012
2	PER SANITARY SEWER RELOCATION	DECEMBER 19, 2011
1	100% COMPLETION PLAN	NOVEMBER 22, 2011
	PLAN ORIGINATION DATE	AUGUST 26, 2011

HIBBELN ENGINEERING COMPANY, L.L.C.
CONSULTING ENGINEERS

LANDSCAPE PLAN 'A'

COOK TRACT
ATHLETIC FIELDS
SITE SITUATE IN
WHITPAIN TOWNSHIP
MONTGOMERY COUNTY, PENNSYLVANIA

PROJECT MANAGER: DSC/AJH	DRAFTED BY: JBS
PROJECT NUMBER: 12460	DRAWING FILE: #12460_SHT23-24
PLAN SCALE: 1" = 100'	PLAN SHEET NUMBER 23 OF 38

0' 50' 100' 200'
GRAPHIC SCALE

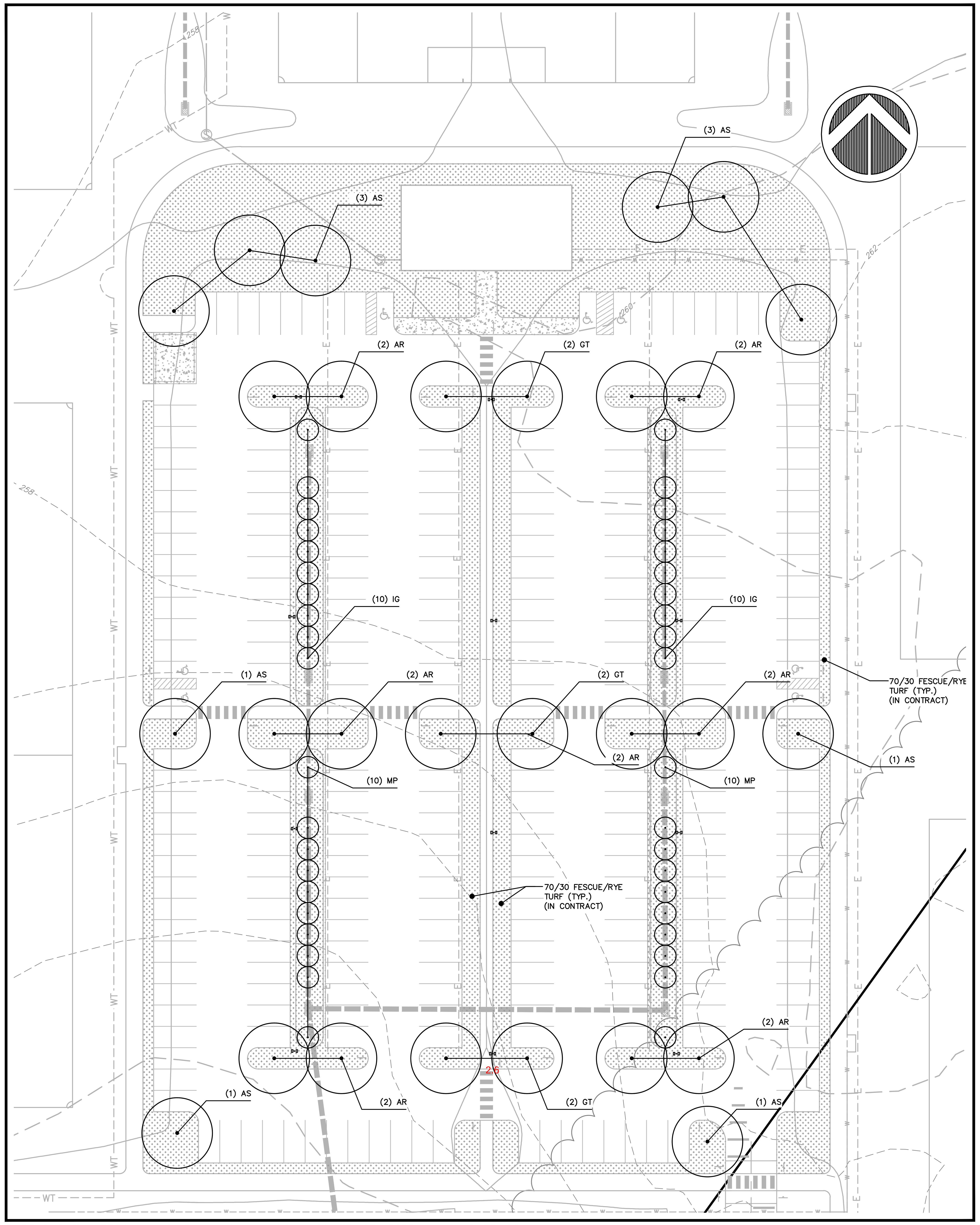

SUPPLEMENTAL TREE & SHRUB PLANTINGS NOT IN CONTRACT; SEEDING IN CONTRACT

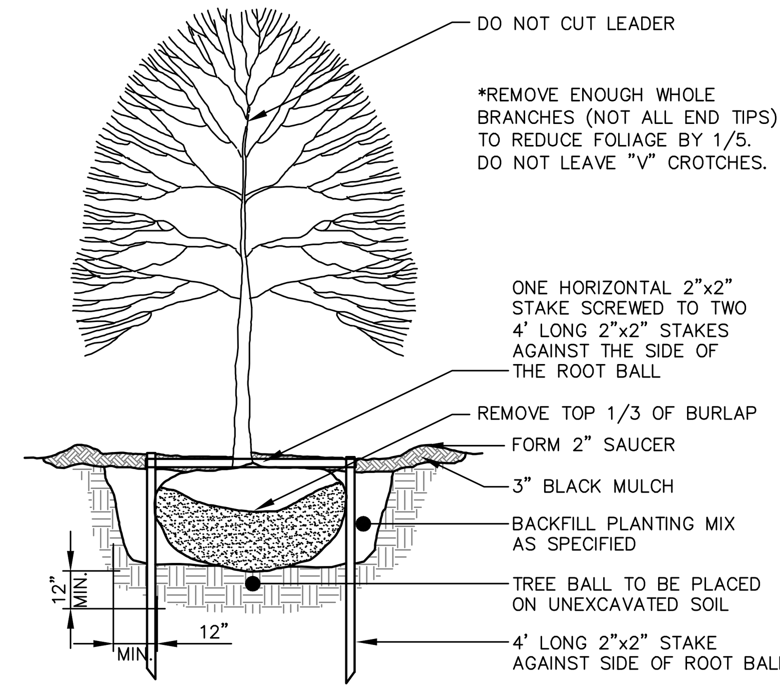

NOTES:
1.) PLANT TREE AT THE SAME LEVEL AS GROWN IN THE NURSERY.
2.) SET TOP OF ROOT BALL ABOVE ADJACENT FINISH GRADE AT A HEIGHT OF 2"–3" ABOVE FINISH GRADE.
3.) CONTRACTOR TO MAINTAIN A STRAIGHT AND PLUMB TREE THROUGHOUT THE WARRANTY PERIOD.
4.) SECOND SET OF STAKES TO BE PLACED ON OTHER SIDE OF ROOT BALL IF NEEDED FOR LARGER TREES OR NECESSARY AREAS OF CONCERN.

1/24 DECIDUOUS TREE PLANTING DETAIL

NOT TO SCALE

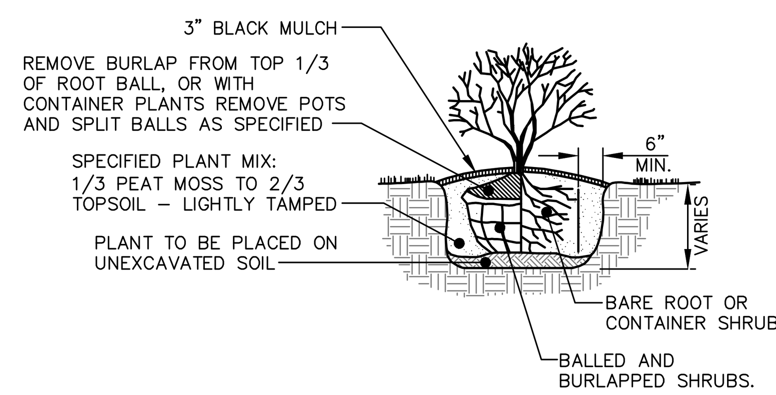

NOTES:
1.) SET PLANTS PLUMB, AND FACE TO GIVE BEST APPEARANCE TO ADJACENT AREAS.
2.) DO NOT PRUNE EVERGREENS EXCEPT TO REMOVE DEAD AND BROKEN BRANCHES.
3.) SET TOP OF ROOT BALL ABOVE ADJACENT FINISH GRADE AT A HEIGHT OF 2"–3" ABOVE FINISH GRADE.
4.) THIN BRANCHES AND FOLIAGE (NOT ALL BRANCH TIPS) BY 1/3, RETAINING NORMAL PLANT SHAPE. NEVER CUT LEADER.
5.) DO NOT USE TOPSOIL SAUCER.
6.) BALLS OF CONTAINERIZED PLANTS SHALL BE BUTTERFLIED AT INSTALLATION TO ENCOURAGE NEW ROOT DEVELOPMENT.

2/24 SHRUB PLANTING DETAIL

NOT TO SCALE

ABOVE LANDSCAPE SPECIFICATIONS & DETAILS PERTAINING TO SHEET 23, IN CONTRACT

PLANTING NOTES

1. THE LOCATIONS OF PLANT MATERIAL SHOWN ON THIS PLAN ARE APPROXIMATE. EXACT LOCATION OF PLANT MATERIAL SHALL BE STAKED IN THE FIELD BY THE LANDSCAPE CONTRACTOR AND LOCATIONS APPROVED BY THE LANDSCAPE ARCHITECT PRIOR TO PLANTING. FINAL LANDSCAPE LAYOUT WILL BE FIELD VERIFIED PRIOR TO FINAL INSTALLATION.

2. LANDSCAPE PLANS SHALL NOT BE UTILIZED TO DETERMINE LOCATIONS, DIMENSIONS OR MEASUREMENTS OF OTHER PROPOSED SITE STRUCTURES. REFER TO APPROPRIATE DRAWINGS BY THE ENGINEER FOR OTHER INFORMATION.

3. PLANT NAMES SHALL AGREE WITH THE NOMENCLATURE "STANDARD PLANT NAMES" AS ADOPTED BY THE AMERICAN JOINT COMMITTEE ON HORTICULTURE NOMENCLATURE.

4. ALL PLANTS SHALL BE TYPICAL OF THEIR SPECIES OR VARIETY. THEY SHALL HAVE WELL DEVELOPED BRANCHES, AND VIGOROUS FIBROUS ROOT SYSTEMS. THEY SHALL BE FREE FROM DISFIGURING KNOTS, SUN SCALE, INJURIES, ABRASIONS OF BARK, PLANT DISEASES, INSECT EGGS, BORERS, AND ALL FORMS OF INFESTATION. ALL COLLECTED MATERIAL SHALL BE CLEAN, SOUND STOCK, AND FREE FROM DECAYING STUMPS.

5. SIZE AND GRADING STANDARDS SHALL CONFORM TO THE "U.S.A. STANDARD FOR NURSERY STOCK". LOOSE, BROKEN, OR MANUFACTURED BALLS WILL BE REJECTED.

6. BALLED AND BURLAPED, AND BALLED AND PLATFORM PLANTS, SHALL HAVE SOLID BALL OF EARTH SECURELY HELD IN PLACE BY BURLAP AND STOUT ROPE. MINIMUM BALL SIZES SHALL BE SPECIFIED IN THE "U.S.A. STANDARD FOR NURSERY STOCK" AS SPONSORED BY THE AMERICAN ASSOCIATION OF NURSERYMAN.

7. ALL PLANTS SHALL BE SUBJECT TO INSPECTION BEFORE ANY PLANTS ARE DUG AND REPLACED. ALL REJECTED MATERIAL SHALL BE IMMEDIATELY REMOVED FROM THE SITE AND REPLACED WITH ACCEPTABLE MATERIAL AT NO ADDITIONAL COST. PROPOSED PLANT MATERIAL MAY BE NOT BE SUBSTITUTED WITHOUT WRITTEN APPROVAL FROM THE LANDSCAPE ARCHITECT.

8. PLANTING SHALL BE CONDUCTED UNDER SEASONS WHICH ARE NORMAL FOR SUCH WORK. AT THE OPTION AND ON THE FULL RESPONSIBILITY OF THE CONTRACTOR, PLANTING OPERATIONS MAY BE CONDUCTED UNDER UNREASONABLE CONDITIONS. IN GENERAL, PLANT DURING THE FOLLOWING SEASONS UNLESS OTHERWISE APPROVED BY THE LANDSCAPE ARCHITECT:
DECIDUOUS TREES AND SHRUBS: WHEN PLANTS ARE DORMANT (FALL AND EARLY SPRING).
BROADLEAF EVERGREEN TREES AND SHRUBS: FROM THE TIME THE FROST LEAVES THE GROUND UNTIL NEW GROWTH IS WELL DEVELOPED. (SPRING)
GROUNDCOVER: AFTER THE DANGER OF FROST HAS PAST. (SPRING UNTIL EARLY SUMMER)

9. PROVIDE CONTINUOUS TRIPLE–SHREDDED HARDWOOD BARK (3" THICK) AT THE BASE OF THE SPECIMEN TREES AND SHRUBS.

10. THE CONTRACTOR SHALL BE RESPONSIBLE FOR DETERMINING WHERE THE UNDERGROUND UTILITIES EXIST ON–SITE. THE CONTRACTOR SHALL EXERCISE EXTREME CAUTION WHEN EXCAVATING NEAR THESE UTILITIES.

11. ALL DISTURBED PERVIOUS AREAS EXCEPT PLANTING BEDS SHALL BE SEEDED AND MULCHED.

12. THE CONTRACTOR SHALL NOTIFY ALL UTILITY COMPANIES PRIOR TO EXCAVATING PLANT PITS. PLANT LOCATIONS MAY BE ADJUSTED IN THE FIELD TO AVOID INTERFERENCE WITH UNDERGROUND UTILITIES. IN ADDITION, THE CONTRACTOR SHALL VISIT THE SITE PRIOR TO COMMENCING WORK TO REVIEW THE EXISTING CONDITIONS. NOTIFY THE LANDSCAPE ARCHITECT AND THE TOWNSHIP ENGINEER OF ANY MAJOR DISCREPANCIES WHICH AFFECT THE WORK.

13. SHOULD ANY DISCREPANCY ARISE BETWEEN THE PLANTING PLAN AND THE PLANT SCHEDULE, THE PLAN SHOULD GOVERN AS TO THE QUANTITY OF PLANT MATERIAL.

14. THE BEGINNING OF THE GUARANTEE PERIOD SHALL START AFTER THE ACCEPTANCE AT THE FINAL INSPECTION. ALL PLANTING MUST BE ALIVE AND HEALTHY TO BE CONSIDERED COMPLETE. PLANT MATERIAL SHALL BE GUARANTEED BY THE CONTRACTOR FOR A 18–MONTH PERIOD.

15. CONTRACTOR SHALL SPRAY ALL NEW PLANT MATERIAL WITH DEEROUT (REFER TO WWW.DEEROUT.COM) OR APPROVED EQUIVALENT, ON A MONTHLY BASIS BEGINNING ON THE DAY OF EACH PLANTING LASTING THROUGHOUT THE GUARANTEE PERIOD AS DEFINED ABOVE. FURTHERMORE ALL TREES SHALL BE FITTED WITH A FLEXIBLE – OPEN AIR MESH, 48" HIGH, TO DETER DEER RUB.

PENNSYLVANIA ONE CALL SYSTEM, INC. 1-800-242-1776 STOP – CALL BEFORE YOU DIG

LOCATIONS OF ALL EXISTING UTILITIES SHOWN HEREON HAVE BEEN DEVELOPED FROM UTILITY COMPANY RECORDS AND/OR ABOVE–GROUND INSPECTION OF THE SITE. COMPLETENESS OR ACCURACY OF TYPE, SIZE, DEPTH OR HORIZONTAL LOCATION OF UNDERGROUND FACILITIES OR STRUCTURES CANNOT BE GUARANTEED. PURSUANT TO REQUIREMENTS OF THE PENNSYLVANIA LEGISLATIVE ACT NUMBER 38, CONTRACTORS MUST VERIFY LOCATION AND DEPTH OF ALL UNDERGROUND UTILITIES AND FACILITIES PRIOR TO START OF WORK. SERIAL NUMBER 20110671016.

TREE AND SHRUB PLANTING SCHEDULE, NOT IN CONTRACT

SYM.	QTY.	BOTANICAL NAME	COMMON NAME	SIZE
		DECIDUOUS TREES:		
AR	12	ACER RUBRUM	RED MAPLE	2½–3" CAL. 14–16' TALL B&B
AS	10	ACER SACCHARUM	SUGAR MAPLE	2½–3" CAL. 14–16' TALL B&B
GT	6	GLEDITSIA TRIACANTHOS INERMIS 'SHADEMASTER'	SHADEMASTER HONEYLOCUST	2½–3" CAL. 14–16' TALL B&B
		SHRUBS:		
IG	20	ILEX GLABRA	INKBERRY	NO. 5 CONTAINER
MP	20	MYRICA PENSYLVANICA	NORTHERN BAYBERRY	NO. 5 CONTAINER

SEED MIX LEGEND IN CONTRACT

70/30 FESCUE/RYE TURF (IN CONTRACT)

HIBBELN ENGINEERING COMPANY, L.L.C.
CONSULTING ENGINEERS
215·619·9070 PA, NJ, MD & DE
593 Skippack Pike, Suite 300
Blue Bell, Pennsylvania 19422
www.hibbelnengineering.com
IN CONJUNCTION WITH:
LandConcepts
593 Skippack Pike • Suite 300 • Blue Bell, PA 19422

COOK TRACT ATHLETIC FIELDS

PREPARED FOR
WHITPAIN TOWNSHIP
SITE SITUATE IN
WHITPAIN TOWNSHIP
MONTGOMERY COUNTY, PENNSYLVANIA

NO.	REVISIONS	DATE
6	PER ADDITION OF SEDIMENT BASIN B PHASE 4 PLAN	JUNE 18, 2012
5	PER MCCD LETTER (2–9–12)	FEBRUARY 10, 2012
4	PER STORM SYTEM 'B'	JANUARY 31, 2012
3	PER MCCD LETTER (1/3/12)	JANUARY 5, 2012
2	PER SANITARY SEWER RELOCATION	DECEMBER 19, 2011
1	100% COMPLETION PLAN	NOVEMBER 22, 2011
	PLAN ORIGINATION DATE	AUGUST 26, 2011

HIBBELN ENGINEERING COMPANY, L.L.C.
CONSULTING ENGINEERS

LANDSCAPE PLAN 'B'

COOK TRACT
ATHLETIC FIELDS
SITE SITUATE IN
WHITPAIN TOWNSHIP
MONTGOMERY COUNTY, PENNSYLVANIA

PROJECT MANAGER:	DRAFTED BY:
DSC/AJH	JBS
PROJECT NUMBER: 12460	DRAWING FILE: #12460_SHT23-24
PLAN SCALE: 1" = 30'	PLAN SHEET NUMBER 24 OF 38

GRAPHIC SCALE 0' 15' 30' 60'

EYE LIGHTING INTERNATIONAL

EYE Lighting International of North America, Inc.
a division of Iwasaki Electric of Japan

9150 Hendricks Road
Mentor, Ohio 44060

Tel: (888) 665-2677
Fax: (440) 350-7001

STATISTICS

DESCRIPTION	SYMBOL	AVG.	MAX.	MIN.
LOT SUMMARY	×	0.9 fc	2.6 fc	0.1 fc
SPILL LIGHT SUMMARY	+	0.4 fc	2.6 fc	0.0 fc

LUMINAIRE SCHEDULE

SYMBOL	LABEL	QTY.	CATALOG NUMBER	LAMP
▫▫	B	12	A-L6577-U-3Y-XT-XXXXX	NINE WHITE LIGHT EMITTING DIODES (LEDS), BASE-UP POSITIN
DESCRIPTION				
CAST FINNED METAL HOUSING, CAST BLACK PAINTED METAL DRIVER COVER, MOLDED GRAY PLASTIC PANELS FORE AND AFT OF LED MODULE CONSISTING OF: FLAT METAL MOUNTING PLATE, 9 LEDS, FORMED METAL REFLECTOR WITH PREMIUM SPECULAR FINISH, ONE CLEAR PLASTIC NON-INTEGRAL LENS BELOW EACH LED, MOLDED WHITE PLASTIC MOUNTING PLATE COVER WITH WHITE FLAT PLASTIC INSERT. CLEAR PLASTIC LENS IN CAST BLACK PAINTED METAL DOOR FRAME WITH MOLDED BLACK PLASTIC CUTOFF RING AND HOUSE SIDE SHIELD.				

LIGHTING NOT IN CONTRACT EXCEPT FOR ELECTRICAL CONDUIT

LIGHTING SCHEDULE (TIMES)

THE ELECTRICAL CONTRACTOR SHALL PROVIDE ANY AND ALL MATERIAL AND WORK TO MEET THE FOLLOWING SCHEDULE:

DUSK – 10 PM: ALL PROPOSED LIGHTING SHALL BE LIT.

10 PM – 6 AM: LIMITED LIGHTING IN FRONT PARKING LOT SHALL BE LIT FOR SECURITY. SEE PLAN NOTATIONS BELOW.

6 AM – DAYBREAK: ALL PROPOSED LIGHTING SHALL BE LIT.

LIGHTING NOTES

1. SHOULD ANY OUTDOOR LIGHT FIXTURE OR THE TYPE OF LIGHT SOURCE THEREIN BE CHANGED AFTER THE PERMIT HAS BEEN ISSUED, THE PERMITTEE SHALL SUBMIT PRIOR TO SUBSTITUTION A CHANGE REQUEST WHICH MUST BE SUBMITTED TO THE DESIGNATED OFFICIAL FOR APPROVAL, TOGETHER WITH ADEQUATE INFORMATION TO ASSURE COMPLIANCE WITH THE BUCKINGHAM TOWNSHIP ZONING ORDINANCE, WHICH MUST BE RECEIVED PRIOR TO SUBSTITUTION.

2. FOR ALL PROJECTS WHERE THE TOTAL INITIAL OUTPUT OF THE PROPOSED LIGHTING EQUALS OR EXCEEDS 10,000 LUMENS, CERTIFICATION THAT THE LIGHTING, AS INSTALLED, CONFORMS TO THE APPROVED PLANS SHALL BE PROVIDED BY A CERTIFIED ENGINEER BEFORE THE CERTIFICATE OF OCCUPANCY IS ISSUED. UNTIL THIS CERTIFICATION IS SUBMITTED, APPROVAL FOR A USE OF A CERTIFICATE OF OCCUPANCY SHALL NOT BE ISSUED FOR THE PROJECT.

3. THE MUNICIPALITY RESERVES THE RIGHT TO CONDUCT A POST-INSTALLATION NIGHTTIME INSPECTION TO VERIFY COMPLIANCE WITH THE REQUIREMENTS OF THIS CHAPTER, AND IF APPROPRIATE, TO REQUIRE REMEDIAL ACTION AT NO EXPENSE TO THE MUNICIPALITY.

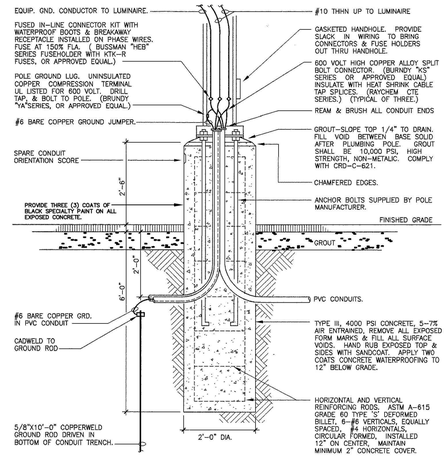

SECTION

1/25 POLE FOUNDATION MOUNTING DETAIL

NOT TO SCALE

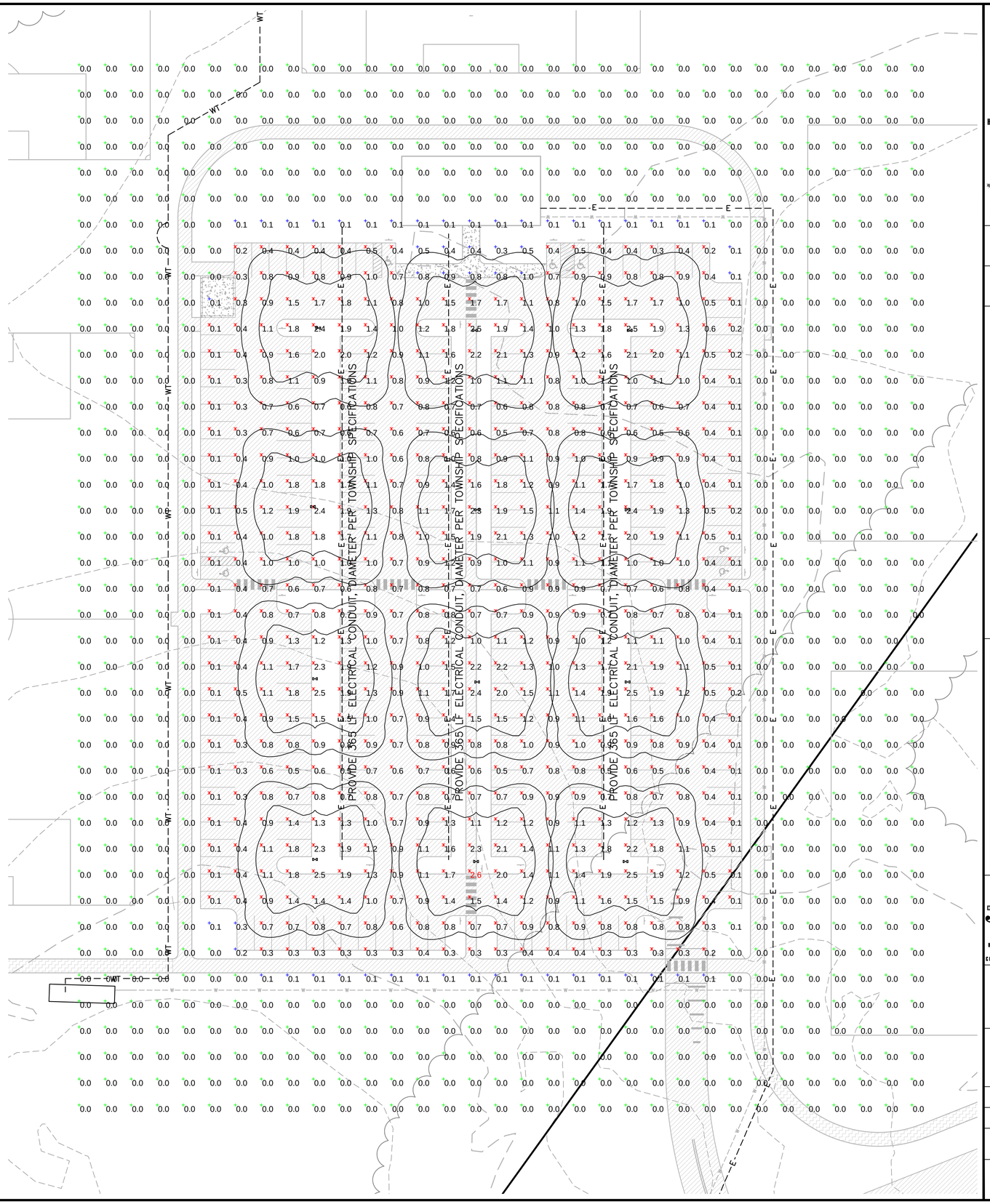

HIBBELN ENGINEERING COMPANY, L.L.C.
CONSULTING ENGINEERS
215-619-9070 PA, NJ, MD & DE
593 Skippack Pike, Suite 300
Blue Bell, Pennsylvania 19422
www.hibbelnengineering.com

IN CONJUNCTION WITH:

Land Concepts
593 Skippack Pike • Suite 300 • Blue Bell, PA 19422

COOK TRACT ATHLETIC FIELDS

PREPARED FOR
WHITPAIN TOWNSHIP

SITE SITUATE IN
WHITPAIN TOWNSHIP
MONTGOMERY COUNTY, PENNSYLVANIA

ALL DESIGNS, DRAWINGS & SPECIFICATIONS CONTAINED IN THESE PLANS ARE THE PROPERTY OF THE ENGINEER AND ARE NOT TO BE USED IN WHOLE OR IN PART FOR ANY OTHER PROJECT WITHOUT THE WRITTEN PERMISSION OF THE ENGINEER. ALL COPYRIGHTS AND OTHER PROPERTY RIGHTS ARE RESERVED BY THE ENGINEER. ANY UNAUTHORIZED USE OF THESE PLANS AND SPECIFICATIONS WILL BE AT THE SOLE RISK OF THE PARTY USING OR RECEIVING THE BENEFIT OF SUCH USE AND WILL BE WITHOUT LIABILITY TO THE ENGINEER. THE PARTY USING OR RECEIVING THE BENEFIT OF SUCH USE AGREES TO INDEMNIFY AND HOLD HARMLESS THE ENGINEER FROM ALL DEMANDS, CLAIMS, OR LIABILITY DUE TO SUCH UNAUTHORIZED USE.

NO.	REVISIONS	PLAN ORIGINATION DATE
1	TOWE COMPLETION PLAN	AUGUST 26, 2011
2	PER BOARD DIRECTION	NOVEMBER 22, 2011
3	PER MCCD LETTER (1-23-12)	JANUARY 9, 2012
4	PER STORM SYSTEM 'B'	JANUARY 31, 2012
5	PER MCCD LETTER (2-9-12)	FEBRUARY 10, 2012
6	PER ADDITION OF SEDIMENT BASIN B PHASE 4 PLAN	JUNE 18, 2012

HIBBELN ENGINEERING COMPANY, L.L.C.
CONSULTING ENGINEERS

LIGHTING PLAN

COOK TRACT ATHLETIC FIELDS
SITE SITUATE IN
WHITPAIN TOWNSHIP
MONTGOMERY COUNTY, PENNSYLVANIA

PROJECT MANAGER:	DRAFTED BY:
DSC/AJH	JBS
PROJECT NUMBER:	DRAWING FILE:
12460	#12460_SHT25
PLAN SCALE:	PLAN SHEET NUMBER
1" = 100'	25 OF 38

0' 50' 100' 200'
GRAPHIC SCALE

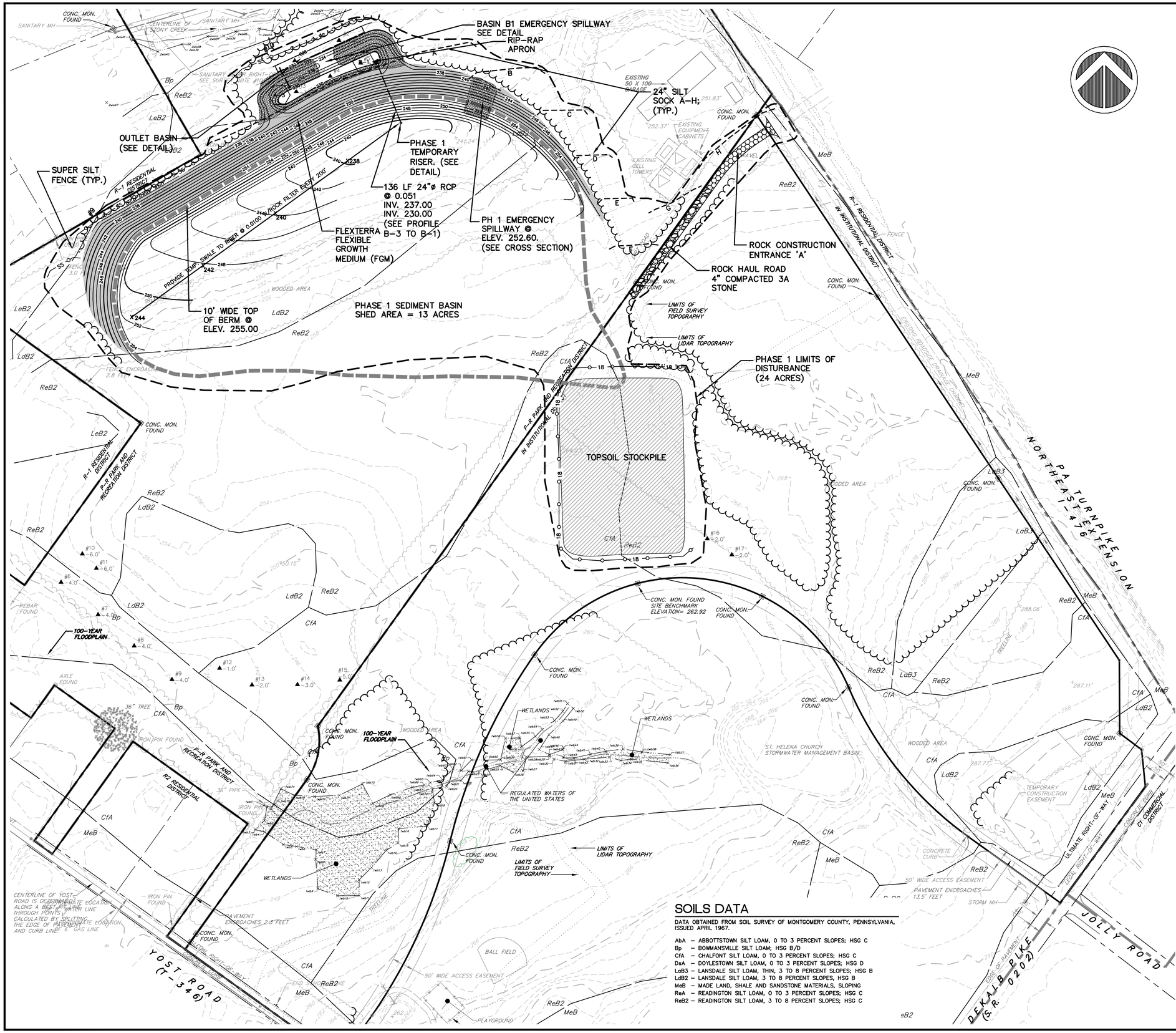

SITE LOCATION MAP 1"= 2,000'

CONSTRUCTION SEQUENCE (PHASE 1)

1. ALL EARTH DISTURBANCE ACTIVITIES SHALL PROCEED IN ACCORDANCE WITH THE FOLLOWING SEQUENCE. EACH STAGE SHALL BE COMPLETED BEFORE ANY FOLLOWING STAGE IS INITIATED. CLEARING AND GRUBBING SHALL BE LIMITED TO THOSE AREAS DESCRIBED IN EACH STAGE.

2. THE PERMITTEE OR CO-PERMITTEE SHALL CONTACT THE DEPARTMENT OR AUTHORIZED CONSERVATION DISTRICT AT LEAST SEVEN DAYS BEFORE CONSTRUCTION IS TO BEGIN TO DETERMINE IF A PRE-CONSTRUCTION CONFERENCE IS REQUIRED. THE PERMITTEE, CO_PERMITTEE, AND OTHERS UNDERTAKING THE EARTH DISTURBANCE ACTIVITY MUST ATTEND A PRE-CONSTRUCTION CONFERENCE WHEN REQUESTED BY THE DEPARTMENT OR AUTHORIZED CONSERVATION DISTRICT. THE PERMITTEE OR CO-PERMITTEE MUST BRING A COPY OF THEIR NPDES PERMIT, A COPY OF THE STAMPED PLAN FROM THE CONSERVATION DISTRICT, AND ALL ASSOCIATED DEPARTMENT APPROVALS/PERMITS WHICH MUST BE AVAILABLE AT THE CONFERENCE UPON REQUEST. ALSO, AT LEAST 3 DAYS BEFORE STARTING ANY EARTH DISTURBANCE ACTIVITIES, ALL CONTRACTORS INVOLVED IN THOSE ACTIVITIES SHALL NOTIFY THE PENNSYLVANIA ONE CALL SYSTEM INCORPORATED AT 1-800-242-1776 FOR BURIED UTILITIES LOCATIONS.

3. INSTALL THE ROCK CONSTRUCTION ENTRANCE 'A'.

4. SUPER SILT FENCE AND SILT SOCK SHALL BE PLACED DOWNSTREAM OF ALL EXCAVATIONS. SEDIMENT MUST BE REMOVED WHERE ACCUMULATIONS REACH 1/2 ABOVE GROUND HEIGHTS OF SILT FENCING, AND DISPOSED OF BY REGRADING AND STABILIZING THE REMOVED ACCUMULATION ON-SITE.

5. SAFETY ORANGE FENCE/CAUTION TAPE OR EQUIVALENT BARRIER TO CONSTRUCTION VEHICLES SHALL BE PLACED AT THE OUTER DRIPLINE OF ALL TREES TO BE PROTECTED.

6. CLEAR AND GRUB VEGETATION, STRIP AND STOCKPILE TOPSOIL ONLY AS NECESSARY TO CONSTRUCT PHASE 1 BERM AND OUTLET STRUCTURE.

7. UPON COMPLETION OF ANY EARTH DISTURBANCE ACTIVITY, OR ANY PHASE/STAGE OF THE ACTIVITY, THE SITE SHALL BE IMMEDIATELY SEEDED, MULCHED OR OTHERWISE PROTECTED FROM ACCELERATED EROSION AND SEDIMENTATION.

8. THE SEDIMENT BASIN SHALL BE FUNCTIONAL AND STABILIZED PRIOR TO ANY AND ALL UPSLOPE DISTURBANCE. CONSTRUCT PHASE 1 SEDIMENT BASIN BERM, OUTLET STRUCTURE, RIP-RAP APRON, AND EMERGENCY SPILLWAY. FILL AND GRADE AS SPECIFIED. PROVIDE CONTINUING MONITORING OF THE OUTLET BASIN TO PREVENT SEDIMENT BUILDUP WITHIN THE STONE. ENSURE A LEVEL SURFACE FOR THE INSTALLATION OF THE EROSION CONTROL BLANKET.

9. FINISH GRADE, INSTALL SPILLWAY EROSION CONTROL BLANKET AND SEED OUTER SLOPE OF PHASE 1 SEDIMENT BASIN BERM UTILIZING A FLEXIBLE GROWTH MEDIUM.

10. PROCEED WITH PHASE 2, SHEET 27.

LEGEND

LdB2 / ReB2	SOILS LINE
358	EXISTING CONTOUR
360	EXISTING INDEX CONTOUR
	EXISTING TREE CANOPY
▲	INFILTRATION TEST LOCATION
	EXISTING WETLANDS
358	PHASE 1 CONTOUR
360	PHASE 1 INDEX CONTOUR
SS SS	SUPER FILTER FABRIC FENCE
18 18	18" FILTER FABRIC FENCE
	STORMWATER SHED LINE
	ROCK CONSTRUCTION ENTRANCE
	TOPSOIL STOCKPILE
	LIMITS OF DISTURBANCE
	ROCK RIP-RAP
	NAG SC150BN EROSION CONTROL BLANKET OR APPROVED EQUAL
	FLEXTERRA FLEXIBLE GROWTH MEDIUM
	24" SILT SOCK
	PROPOSED TREE CLEAR LINE

SOILS DATA

DATA OBTAINED FROM SOIL SURVEY OF MONTGOMERY COUNTY, PENNSYLVANIA, ISSUED APRIL 1967.

AbA – ABBOTTSTOWN SILT LOAM, 0 TO 3 PERCENT SLOPES; HSG C
Bp – BOWMANSVILLE SILT LOAM; HSG B/D
CfA – CHALFONT SILT LOAM, 0 TO 3 PERCENT SLOPES; HSG C
DsA – DOYLESTOWN SILT LOAM, 0 TO 3 PERCENT SLOPES; HSG D
LdB3 – LANSDALE SILT LOAM, THIN, 3 TO 8 PERCENT SLOPES; HSG B
LdB2 – LANSDALE SILT LOAM, 3 TO 8 PERCENT SLOPES, HSG B
MeB – MADE LAND, SHALE AND SANDSTONE MATERIALS, SLOPING
ReA – READINGTON SILT LOAM, 0 TO 3 PERCENT SLOPES; HSG C
ReB2 – READINGTON SILT LOAM, 3 TO 8 PERCENT SLOPES; HSG C

LOCATIONS OF ALL EXISTING UTILITIES SHOWN HEREON HAVE BEEN DEVELOPED FROM UTILITY COMPANY RECORDS AND/OR ABOVE-GROUND INSPECTION OF THE SITE. COMPLETENESS OR ACCURACY OF TYPE, SIZE, DEPTH OR HORIZONTAL LOCATION OF UNDERGROUND FACILITIES OR STRUCTURES CANNOT BE GUARANTEED. PURSUANT TO REQUIREMENTS OF THE PENNSYLVANIA LEGISLATIVE ACT NUMBER 38, CONTRACTORS MUST VERIFY LOCATION AND DEPTH OF ALL UNDERGROUND UTILITIES AND FACILITIES PRIOR TO START OF WORK. SERIAL NUMBER 20110671016.

HIBBELN ENGINEERING COMPANY, L.L.C.
CONSULTING ENGINEERS
215-619-9070 PA, NJ, MD & DE
593 Skippack Pike, Suite 300
Blue Bell, Pennsylvania 19422
www.hibbelnengineering.com
IN CONJUNCTION WITH:
LandConcepts
593 Skippack Pike • Suite 300 • Blue Bell, PA 19422

COOK TRACT ATHLETIC FIELDS

PREPARED FOR
WHITPAIN TOWNSHIP
SITE SITUATE IN
WHITPAIN TOWNSHIP
MONTGOMERY COUNTY, PENNSYLVANIA

NO.	REVISIONS	PLAN ORIGINATION DATE
1	TOWE COMPLETION PLAN	AUGUST 26, 2011
2	PER SCD LETTER (11-21-11)	NOVEMBER 22, 2011
3	PER MCCD LETTER (12-9-11)	JANUARY 4, 2012
4	PER STORM SYTEM 'B'	JANUARY 31, 2012
5	PER MCCD LETTER (2-9-12)	FEBRUARY 10, 2012
6	PER ADDITION OF SEDIMENT BASIN B PHASE 4 PLAN	JUNE 18, 2013

I'D TERRANCE HIBBELN, PE OF HIBBELN ENGINEERING COMPANY, L.L.C. DO HEREBY CERTIFY THAT THE PLAN AS SHOWN AND DESCRIBED HEREON IS A CORRECT REPRESENTATION OF THE IMPROVEMENTS AS DESIGNED BY ME AND THAT ALL LAWS AND ORDINANCES GOVERNING THE SUBMISSION OF THE PLAN HAVE BEEN COMPLIED WITH TO THE BEST OF MY KNOWLEDGE, INFORMATION AND BELIEF. I ALSO CERTIFY THAT I AM A DULY REGISTERED PROFESSIONAL ENGINEER IN THE COMMONWEALTH OF PENNSYLVANIA AND THAT THE FIRM OF WHICH I AM A MEMBER IS DULY AUTHORIZED TO PRACTICE ENGINEERING IN THE COMMONWEALTH OF PENNSYLVANIA.

HIBBELN ENGINEERING COMPANY, L.L.C.
CONSULTING ENGINEERS

PHASE 1 EROSION AND SEDIMENTATION CONTROL PLAN

COOK TRACT ATHLETIC FIELDS
SITE SITUATE IN
WHITPAIN TOWNSHIP
MONTGOMERY COUNTY, PENNSYLVANIA

PROJECT MANAGER: DSC/AJH	DRAFTED BY: MLW
PROJECT NUMBER: 12460	DRAWING FILE: #12460_SHT26
PLAN SCALE: 1"=100'	PLAN SHEET NUMBER 26 OF 38

0' 50' 100' 200'
GRAPHIC SCALE

PENNSYLVANIA ONE CALL SYSTEM, INC. 1-800-242-1776 CALL BEFORE YOU DIG

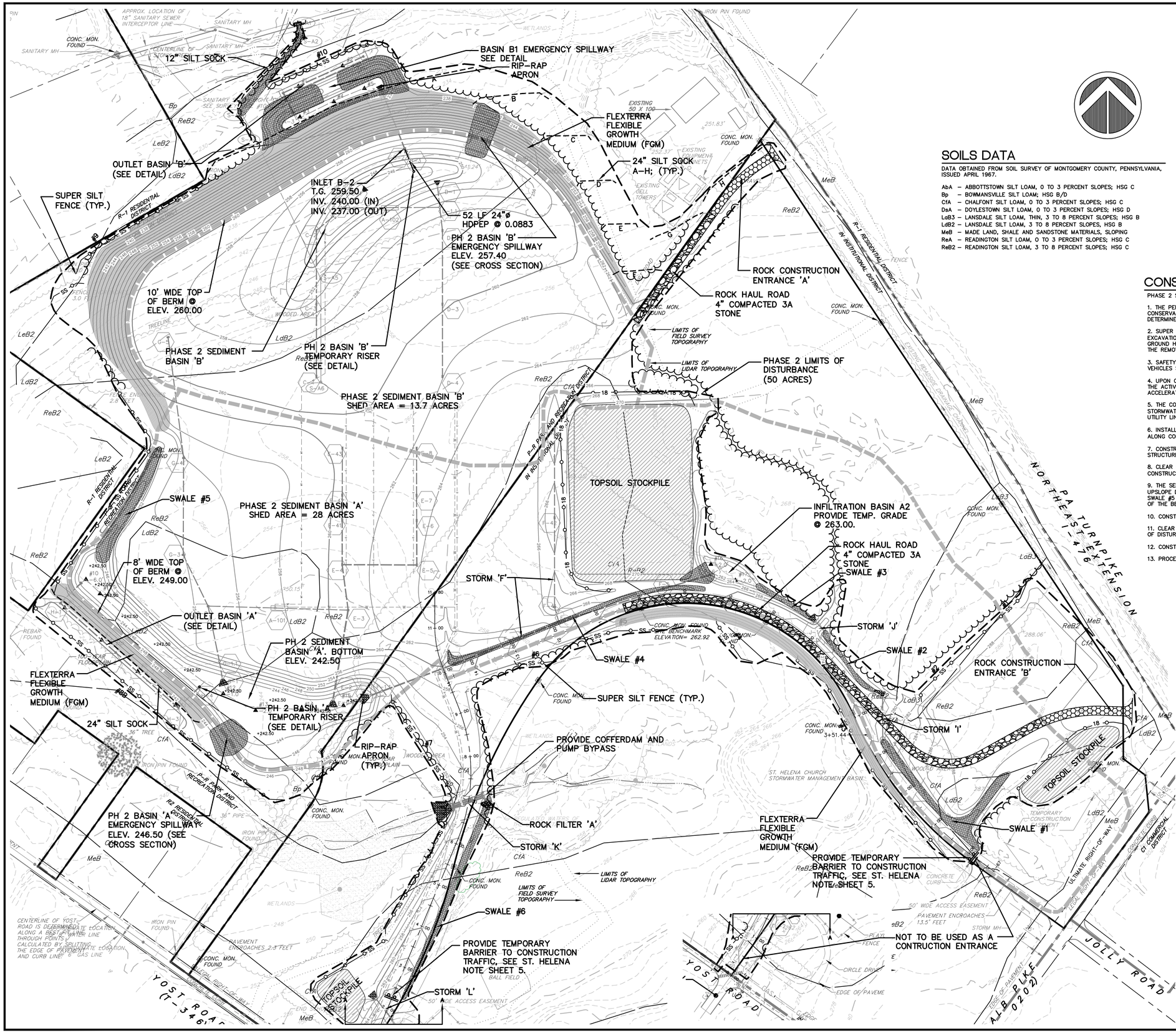

SOILS DATA

DATA OBTAINED FROM SOIL SURVEY OF MONTGOMERY COUNTY, PENNSYLVANIA, ISSUED APRIL 1967.

AbA	– ABBOTTSTOWN SILT LOAM, 0 TO 3 PERCENT SLOPES; HSG C
Bp	– BOWMANSVILLE SILT LOAM; HSG B/D
CfA	– CHALFONT SILT LOAM, 0 TO 3 PERCENT SLOPES; HSG C
DaA	– DOYLESTOWN SILT LOAM, 0 TO 3 PERCENT SLOPES; HSG D
LdB3	– LANSDALE SILT LOAM, THIN, 3 TO 8 PERCENT SLOPES; HSG B
LdB2	– LANSDALE SILT LOAM, 3 TO 8 PERCENT SLOPES, HSG B
MeB	– MADE LAND, SHALE AND SANDSTONE MATERIALS, SLOPING
ReA	– READINGTON SILT LOAM, 0 TO 3 PERCENT SLOPES; HSG C
ReB2	– READINGTON SILT LOAM, 3 TO 8 PERCENT SLOPES; HSG C

SITE LOCATION MAP 1"= 2,000'

CONSTRUCTION SEQUENCE (PHASE 2)

PHASE 2 SHALL COMMENCE ONLY AFTER PHASE 1 HAS BEEN COMPLETED.

1. THE PERMITTEE OR CO-PERMITTEE SHALL CONTACT THE DEPARTMENT OR AUTHORIZED CONSERVATION DISTRICT AT LEAST SEVEN DAYS BEFORE CONSTRUCTION IS TO BEGIN TO DETERMINE IF A PRE-CONSTRUCTION CONFERENCE IS REQUIRED.

2. SUPER SILT FENCE AND SILT SOCK SHALL BE PLACED DOWNSTREAM OF ALL EXCAVATIONS. SEDIMENT MUST BE REMOVED WHERE ACCUMULATIONS REACH 1/2 ABOVE GROUND HEIGHTS OF SILT FENCING, AND DISPOSED OF BY REGRADING AND STABILIZING THE REMOVED ACCUMULATION ON-SITE.

3. SAFETY ORANGE FENCE/CAUTION TAPE OR EQUIVALENT BARRIER TO CONSTRUCTION VEHICLES SHALL BE PLACED AT THE OUTER DRIPLINE OF ALL TREES TO BE PROTECTED.

4. UPON COMPLETION OF ANY EARTH DISTURBANCE ACTIVITY, OR ANY PHASE/STAGE OF THE ACTIVITY, THE SITE SHALL BE SEEDED, MULCHED OR OTHERWISE PROTECTED FROM ACCELERATED EROSION AND SEDIMENTATION.

5. THE CONSTRUCTION OF SANITARY SEWER S-A1 TO S-A3 SHALL ONLY OCCUR WHEN NO STORMWATER IS DISCHARGING FROM OUTLET BASIN 'B'. CONTRACTOR TO REFERENCE UTILITY LINE TRENCH EXCAVATION NOTES ON SHEET 29.

6. INSTALL THE ROCK CONSTRUCTION ENTRANCE 'B'. INSTALL FLEXIBLE GROWTH MEDIUM ALONG CONSTRUCTION ENTRANCE 'B' AS SPECIFIED.

7. CONSTRUCT LEVEL SPREADER H-1 TO H-3 AND SEDIMENT BASIN 'A' OUTLET STRUCTURES AND PIPE.

8. CLEAR AND GRUB VEGETATION, STRIP AND STOCKPILE TOPSOIL ONLY AS NECESSARY TO CONSTRUCT PHASE 2 SEDIMENT BASIN 'A' BERM.

9. THE SEDIMENT BASIN SHALL BE FUNCTIONAL AND STABILIZED PRIOR TO ANY AND ALL UPSLOPE DISTURBANCE. CONSTRUCT SEDIMENT BASIN 'A' & 'B' BERM, TEMPORARY RISER, SWALE #5 AND SPILLWAY. INSTALL EROSION CONTROL BLANKET AND SEED OUTER SLOPE OF THE BERM UTILIZING A FLEXIBLE GROWTH MEDIUM.

10. CONSTRUCT STORM SEWER 'F', 'J', 'I', K AND L AND ASSOCIATED SWALES.

11. CLEAR AND GRUB VEGETATION, STRIP AND STOCKPILE TOPSOIL WITHIN PHASE 2 LIMITS OF DISTURBANCE.

12. CONSTRUCT UNDERGROUND UTILITIES AND FILL/GRADE AS SPECIFIED HEREON.

13. PROCEED WITH PHASE 3, SHEET 28.

LEGEND

- SOILS LINE
- EXISTING CONTOUR
- EXISTING INDEX CONTOUR
- EXISTING TREE CANOPY
- INFILTRATION TEST LOCATION
- EXISTING WETLANDS
- 2" DIP WATER
- ELECTRIC
- STORM SEWER
- SANITARY SEWER
- RIP-RAP APRON
- PHASE 2 CONTOUR
- PHASE 2 INDEX CONTOUR
- SUPER FILTER FABRIC FENCE
- 18" FILTER FABRIC FENCE
- STORMWATER SHED LINE
- ROCK CONSTRUCTION ENTRANCE
- TOPSOIL STOCKPILE
- LIMITS OF DISTURBANCE
- ROCK RIP-RAP
- EROSION CONTROL BLANKET OR TURF REINFORCEMENT MAT (SEE SWALE & EMERGENCY SPILLWAY DETAILS)
- FLEXTERRA FLEXIBLE GROWTH MEDIUM
- 24" SILT SOCK
- PROPOSED TREE CLEAR LINE

LOCATIONS OF ALL EXISTING UTILITIES SHOWN HEREON HAVE BEEN DEVELOPED FROM UTILITY COMPANY RECORDS AND/OR ABOVE-GROUND INSPECTION OF THE SITE. COMPLETENESS OR ACCURACY OF TYPE, SIZE, DEPTH OR HORIZONTAL LOCATION OF UNDERGROUND FACILITIES OR STRUCTURES CANNOT BE GUARANTEED. PURSUANT TO REQUIREMENTS OF THE PENNSYLVANIA LEGISLATIVE ACT NUMBER 38, CONTRACTORS MUST VERIFY LOCATION AND DEPTH OF ALL UNDERGROUND UTILITIES AND FACILITIES PRIOR TO START OF WORK. SERIAL NUMBER 20110671016.

HIBBELN ENGINEERING COMPANY, L.L.C.
CONSULTING ENGINEERS
215-619-9070 PA, NJ, MD & DE
593 Skippack Pike, Suite 300
Blue Bell, Pennsylvania 19422
www.hibbelnengineering.com
IN CONJUNCTION WITH:
LandConcepts
593 Skippack Pike • Suite 300 • Blue Bell, PA 19422

COOK TRACT ATHLETIC FIELDS

PREPARED FOR
WHITPAIN TOWNSHIP
SITE SITUATE IN
WHITPAIN TOWNSHIP
MONTGOMERY COUNTY, PENNSYLVANIA

NO.	REVISIONS	DATE
1	TOWNSHIP COMMENTS	AUGUST 26, 2011
2	PER TOWNSHIP COMMENTS	NOVEMBER 22, 2011
3	PER MCCD LETTER (1/3/12)	JANUARY 3, 2012
4	PER STORM SYSTEM 'B'	JANUARY 31, 2012
5	PER MCCD LETTER (2-9-12)	FEBRUARY 10, 2012
6	PER ADDITION OF SEDIMENT BASIN B PHASE 4 PLAN	JUNE 18, 2012

THE ENGINEER'S SEAL AND SIGNATURE APPEARING ON THIS DOCUMENT IS A REPRESENTATION THAT THE WORK DESCRIBED HEREIN WAS PERFORMED BY HIM OR UNDER HIS SUPERVISION AND THAT THE DOCUMENT WAS PREPARED IN ACCORDANCE WITH GENERALLY ACCEPTED ENGINEERING PRACTICES AND THAT HE IS A DULY REGISTERED PROFESSIONAL ENGINEER UNDER THE LAWS OF THE COMMONWEALTH OF PENNSYLVANIA. ANY LIABILITY FOR THE SEAL AND SIGNATURE ON THIS DOCUMENT IS LIMITED TO THE CONTENTS OF THE DOCUMENT AND DOES NOT EXTEND TO ANY OTHER DOCUMENTS PUBLISHED OR DISTRIBUTED WITH THIS DOCUMENT, UNLESS SAID DOCUMENTS ARE SPECIFICALLY REFERENCED OR ATTACHED HERETO.

AUGUST 26, 2011
PLAN ORIGINATION DATE

HIBBELN ENGINEERING COMPANY, L.L.C.
CONSULTING ENGINEERS

PHASE 2 EROSION AND SEDIMENTATION CONTROL PLAN

COOK TRACT
ATHLETIC FIELDS
SITE SITUATE IN
WHITPAIN TOWNSHIP
MONTGOMERY COUNTY, PENNSYLVANIA

PROJECT MANAGER: DSC/AJH	DRAFTED BY: MLW
PROJECT NUMBER: 12460	DRAWING FILE: #12460_SHT27
PLAN SCALE: 1"=100'	PLAN SHEET NUMBER 27 OF 38

0' 50' 100' 200'
GRAPHIC SCALE

PENNSYLVANIA ONE CALL SYSTEM, INC. 1-800-242-1776 – CALL BEFORE YOU DIG

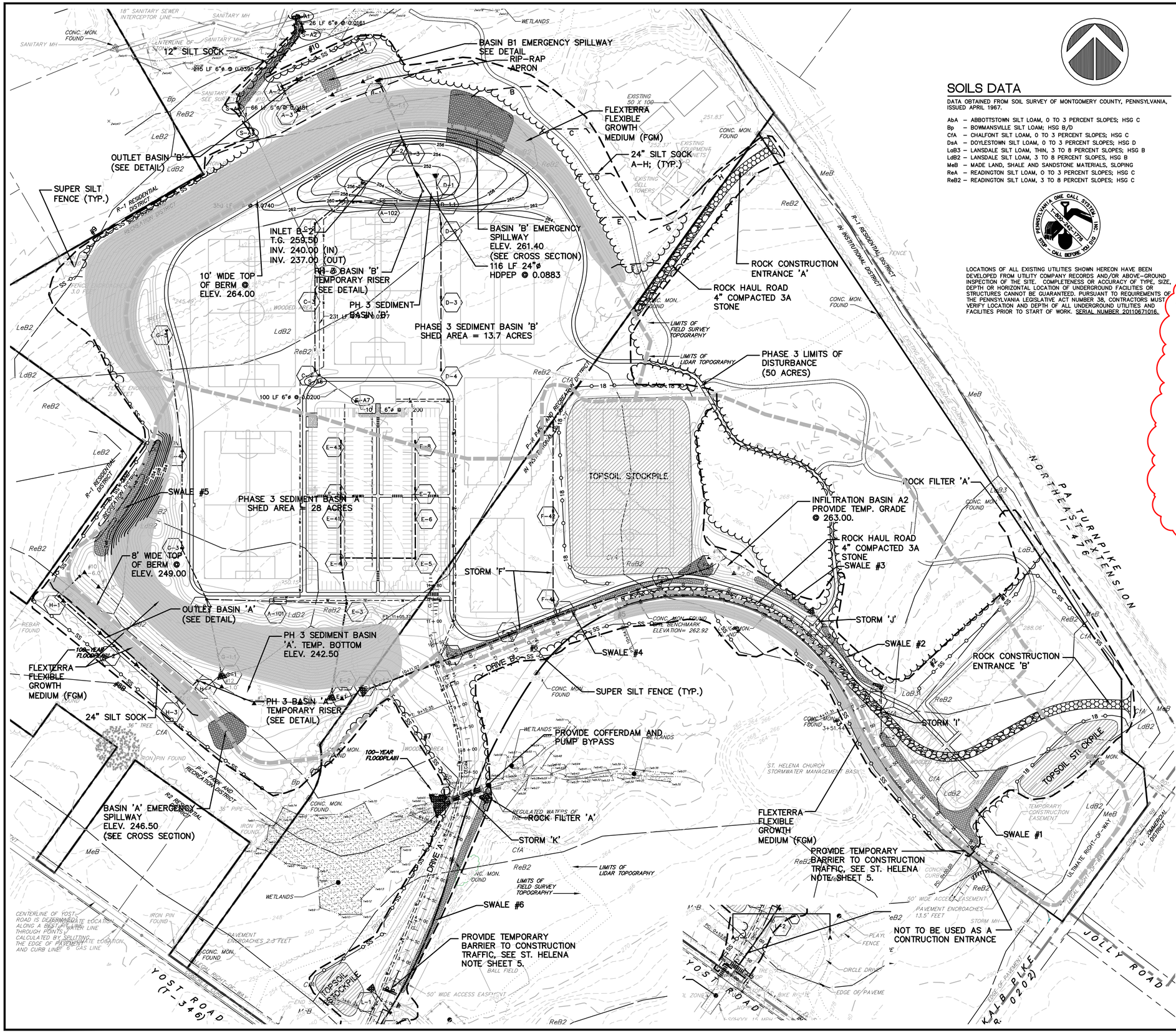

SOILS DATA

DATA OBTAINED FROM SOIL SURVEY OF MONTGOMERY COUNTY, PENNSYLVANIA, ISSUED APRIL 1967.

AbA – ABBOTTSTOWN SILT LOAM, 0 TO 3 PERCENT SLOPES; HSG C
Bp – BOWMANSVILLE SILT LOAM; HSG B/D
CfA – CHALFONT SILT LOAM, 0 TO 3 PERCENT SLOPES; HSG C
DsA – DOYLESTOWN SILT LOAM, 0 TO 3 PERCENT SLOPES; HSG D
LaB3 – LANSDALE SILT LOAM, THIN, 3 TO 8 PERCENT SLOPES; HSG B
LdB2 – LANSDALE SILT LOAM, 3 TO 8 PERCENT SLOPES, HSG B
MeB – MADE LAND, SHALE AND SANDSTONE MATERIALS, SLOPING
ReA – READINGTON SILT LOAM, 0 TO 3 PERCENT SLOPES; HSG C
ReB2 – READINGTON SILT LOAM, 3 TO 8 PERCENT SLOPES; HSG C

PENNSYLVANIA ONE CALL SYSTEM 1-800-242-1776 STOP! CALL BEFORE YOU DIG

LOCATIONS OF ALL EXISTING UTILITIES SHOWN HEREON HAVE BEEN DEVELOPED FROM UTILITY COMPANY RECORDS AND/OR ABOVE-GROUND INSPECTION OF THE SITE. COMPLETENESS OR ACCURACY OF TYPE, SIZE, DEPTH OR HORIZONTAL LOCATION OF UNDERGROUND FACILITIES OR STRUCTURES CANNOT BE GUARANTEED. PURSUANT TO REQUIREMENTS OF THE PENNSYLVANIA LEGISLATIVE ACT NUMBER 38, CONTRACTORS MUST VERIFY LOCATION AND DEPTH OF ALL UNDERGROUND UTILITIES AND FACILITIES PRIOR TO START OF WORK. SERIAL NUMBER 20110671016.

SITE LOCATION MAP 1"= 2,000'

CONSTRUCTION SEQUENCE (PHASE 3)

PHASE 3 SHALL COMMENCE ONLY AFTER PHASE 2 HAS BEEN COMPLETED.

1. THE PERMITTEE OR CO-PERMITTEE SHALL CONTACT THE DEPARTMENT OR AUTHORIZED CONSERVATION DISTRICT AT LEAST SEVEN DAYS BEFORE CONSTRUCTION IS TO BEGIN TO DETERMINE IF A PRE-CONSTRUCTION CONFERENCE IS REQUIRED.

2. SUPER SILT FENCE AND SILT SOCK SHALL BE PLACED DOWNSTREAM OF ALL EXCAVATIONS. SEDIMENT MUST BE REMOVED WHERE ACCUMULATIONS REACH 1/2 ABOVE GROUND HEIGHTS OF SILT FENCING, AND DISPOSED OF BY REGRADING AND STABILIZING THE REMOVED ACCUMULATION ON-SITE.

3. SAFETY ORANGE FENCE/CAUTION TAPE OR EQUIVALENT BARRIER TO CONSTRUCTION VEHICLES SHALL BE PLACED AT THE OUTER DRIPLINE OF ALL TREES TO BE PROTECTED.

4. UPON COMPLETION OF ANY EARTH DISTURBANCE ACTIVITY, OR ANY PHASE/STAGE OF THE ACTIVITY, THE SITE SHALL BE SEEDED, MULCHED OR OTHERWISE PROTECTED FROM ACCELERATED EROSION AND SEDIMENTATION.

5. RELOCATE PHASE 2 SEDIMENT BASIN 'B' TEMPORARY RISER TO PHASE 3 LOCATION SPECIFIED HEREON.

6. THE SEDIMENT BASIN SHALL BE FUNCTIONAL AND STABILIZED PRIOR TO ANY AND ALL UPSLOPE DISTURBANCE. CONSTRUCT SEDIMENT BASIN 'B' BERM AND SPILLWAY. INSTALL EROSION CONTROL BLANKET AND SEED OUTER SLOPE OF THE BERM UTILIZING A FLEXIBLE GROWTH MEDIUM.

7. FILL AND GRADE AS SPECIFIED HEREON WHILE CONTINUALLY DIRECTING STORMWATER TO SEDIMENT BASIN'S 'A' AND 'B'.

8. CONSTRUCT UNDERGROUND UTILITIES AND FILL/GRADE AS SPECIFIED HEREON.

9. PROCEED WITH PHASE 4, SHEET 28A.

HIBBELN ENGINEERING COMPANY, L.L.C.
CONSULTING ENGINEERS
215-619-9070 PA, NJ, MD & DE
593 Skippack Pike, Suite 300
Blue Bell, Pennsylvania 19422
www.hibbelnengineering.com
IN CONJUNCTION WITH:
LandConcepts
593 Skippack Pike • Suite 300 • Blue Bell, PA 19422

COOK TRACT ATHLETIC FIELDS

PREPARED FOR
WHITPAIN TOWNSHIP
SITE SITUATE IN
WHITPAIN TOWNSHIP
MONTGOMERY COUNTY, PENNSYLVANIA

NO.	REVISIONS	PLAN ORIGINATION DATE
1	COST COMPLETION PLAN	AUGUST 26, 2011
2	PER MUNICIPALITY REVIEW	NOVEMBER 22, 2011
3	PER MCCD LETTER (12-9-12)	JANUARY 3, 2012
4	PER STORM SYSTEM 'B'	JANUARY 31, 2012
5	PER MCCD LETTER (1/27/12)	FEBRUARY 10, 2012
6	PER ADDITION OF SEDIMENT BASIN B PHASE 4 PLAN	JUNE 18, 2012

THE DRAWINGS CONTAINED IN THIS PLAN SET ARE THE PROPERTY OF HIBBELN ENGINEERING COMPANY, L.L.C. AND ARE NOT TO BE USED IN WHOLE OR IN PART FOR ANY OTHER PROJECT WITHOUT THE WRITTEN AUTHORIZATION OF HIBBELN ENGINEERING COMPANY, L.L.C. ANY UNAUTHORIZED USE OF THESE DRAWINGS WILL BE AT THE SOLE RISK OF THE UNAUTHORIZED USER AND WITHOUT LIABILITY TO HIBBELN ENGINEERING COMPANY, L.L.C. ALL RIGHTS RESERVED.

HIBBELN ENGINEERING COMPANY, L.L.C.
CONSULTING ENGINEERS

PHASE 3 EROSION AND SEDIMENTATION CONTROL PLAN

COOK TRACT ATHLETIC FIELDS
SITE SITUATE IN
WHITPAIN TOWNSHIP
MONTGOMERY COUNTY, PENNSYLVANIA

PROJECT MANAGER:	DRAFTED BY:
DSC/AJH	MLW
PROJECT NUMBER: 12460	DRAWING FILE: #12460_SHT28
PLAN SCALE: 1"=100'	PLAN SHEET NUMBER 28 OF 38

0' 50' 100' 200'
GRAPHIC SCALE

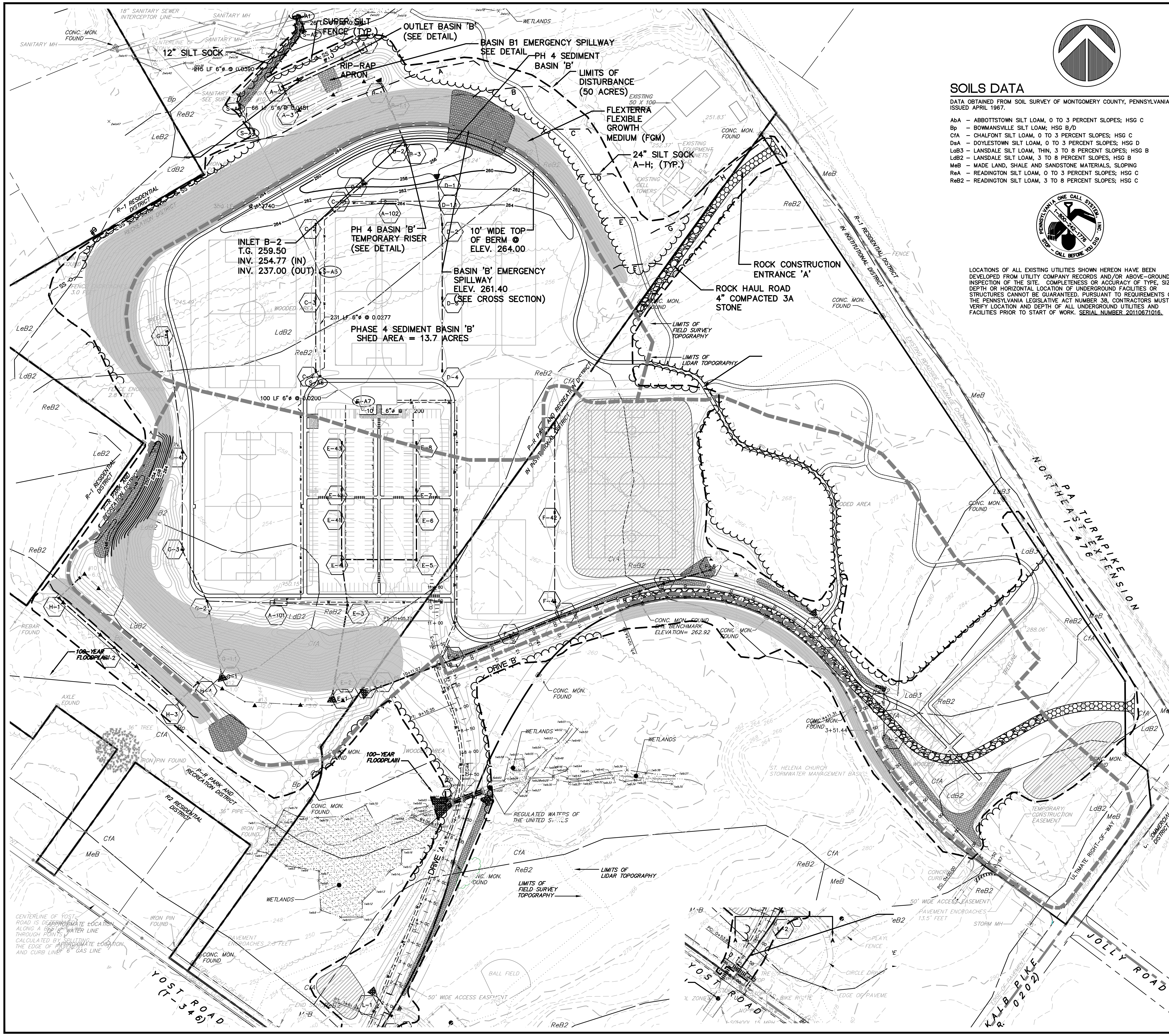

SOILS DATA

DATA OBTAINED FROM SOIL SURVEY OF MONTGOMERY COUNTY, PENNSYLVANIA, ISSUED APRIL 1967.

- AbA – ABBOTTSTOWN SILT LOAM, 0 TO 3 PERCENT SLOPES; HSG C
- Bp – BOWMANSVILLE SILT LOAM; HSG B/D
- CfA – CHALFONT SILT LOAM, 0 TO 3 PERCENT SLOPES; HSG C
- DsA – DOYLESTOWN SILT LOAM, 0 TO 3 PERCENT SLOPES; HSG D
- LaB3 – LANSDALE SILT LOAM, THIN, 3 TO 8 PERCENT SLOPES; HSG B
- LdB2 – LANSDALE SILT LOAM, 3 TO 8 PERCENT SLOPES, HSG B
- MeB – MADE LAND, SHALE AND SANDSTONE MATERIALS, SLOPING
- ReA – READINGTON SILT LOAM, 0 TO 3 PERCENT SLOPES; HSG C
- ReB2 – READINGTON SILT LOAM, 3 TO 8 PERCENT SLOPES; HSG C

PENNSYLVANIA ONE CALL SYSTEM, INC. 1-800-242-1776 STOP – CALL BEFORE YOU DIG

LOCATIONS OF ALL EXISTING UTILITIES SHOWN HEREON HAVE BEEN DEVELOPED FROM UTILITY COMPANY RECORDS AND/OR ABOVE-GROUND INSPECTION OF THE SITE. COMPLETENESS OR ACCURACY OF TYPE, SIZE, DEPTH OR HORIZONTAL LOCATION OF UNDERGROUND FACILITIES OR STRUCTURES CANNOT BE GUARANTEED. PURSUANT TO REQUIREMENTS OF THE PENNSYLVANIA LEGISLATIVE ACT NUMBER 38, CONTRACTORS MUST VERIFY LOCATION AND DEPTH OF ALL UNDERGROUND UTILITIES AND FACILITIES PRIOR TO START OF WORK. SERIAL NUMBER 20110671016.

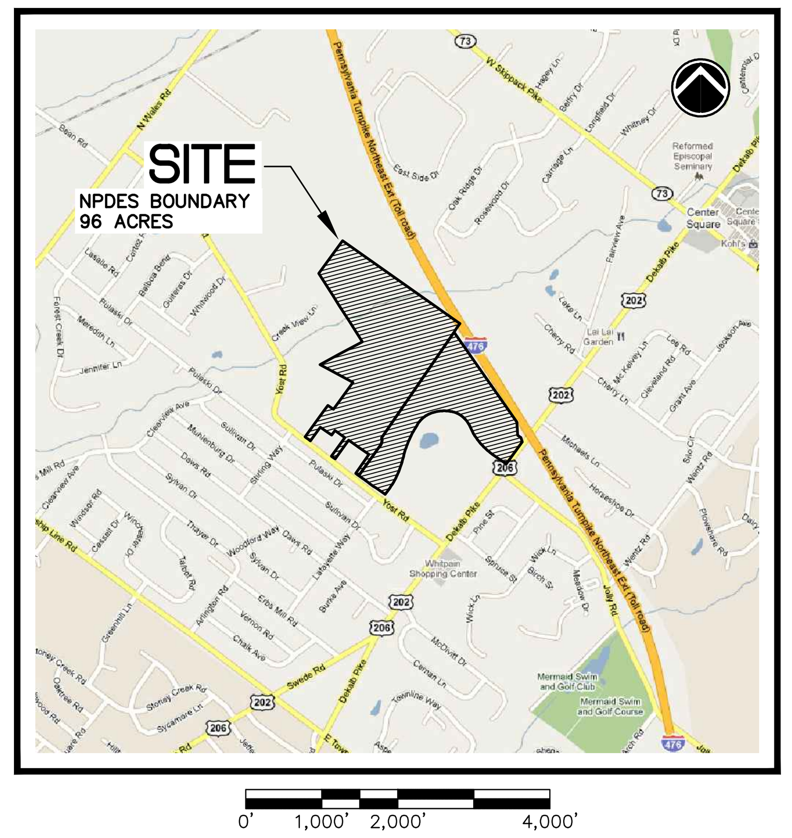

SITE LOCATION MAP 1"= 2,000'

CONSTRUCTION SEQUENCE (PHASE 3)

PHASE 3 SHALL COMMENCE ONLY AFTER PHASE 2 HAS BEEN COMPLETED.

1. THE PERMITTEE OR CO-PERMITTEE SHALL CONTACT THE DEPARTMENT OR AUTHORIZED CONSERVATION DISTRICT AT LEAST SEVEN DAYS BEFORE CONSTRUCTION IS TO BEGIN TO DETERMINE IF A PRE-CONSTRUCTION CONFERENCE IS REQUIRED.

2. SUPER SILT FENCE AND SILT SOCK SHALL BE PLACED DOWNSTREAM OF ALL EXCAVATIONS. SEDIMENT MUST BE REMOVED WHERE ACCUMULATIONS REACH 1/2 ABOVE GROUND HEIGHTS OF SILT FENCING, AND DISPOSED OF BY REGRADING AND STABILIZING THE REMOVED ACCUMULATION ON-SITE.

3. SAFETY ORANGE FENCE/CAUTION TAPE OR EQUIVALENT BARRIER TO CONSTRUCTION VEHICLES SHALL BE PLACED AT THE OUTER DRIPLINE OF ALL TREES TO BE PROTECTED.

4. UPON COMPLETION OF ANY EARTH DISTURBANCE ACTIVITY, OR ANY PHASE/STAGE OF THE ACTIVITY, THE SITE SHALL BE SEEDED, MULCHED OR OTHERWISE PROTECTED FROM ACCELERATED EROSION AND SEDIMENTATION.

5. RELOCATE PHASE 3 SEDIMENT BASIN 'B' TEMPORARY RISER TO PHASE 4 LOCATION SPECIFIED HEREON.

6. THE SEDIMENT BASIN SHALL BE FUNCTIONAL AND STABILIZED PRIOR TO ANY AND ALL UPSLOPE DISTURBANCE.

7. FILL AND GRADE AS SPECIFIED HEREON WHILE CONTINUALLY DIRECTING STORMWATER TO SEDIMENT BASIN'S 'A' AND 'B'.

8. CONSTRUCT ALL REMAINING STORM SEWER.

9. CONSTRUCT PARKING FACILITIES AND CONCRETE PAD.

10. FINISH GRADE TO SPECIFIED ELEVATIONS. CONSTRUCT FIELD IRRIGATION SYSTEM.

11. PERMANENTLY SEED ALL DISTURBED AREA.

12. FLUSH ALL STORM INLETS, APPURTENANCES, AND PIPE.

13. REMOVE SEDIMENT RISER'S AND CONSTRUCT INFILTRATION BASIN'S, BIO-RETENTION FACILITIES AND LEVEL SPREADERS ONLY AFTER UPSLOPE DRAINAGE AREA IS PERMANENTLY STABILIZED PER STANDARD NOTE NO. 16. REFER TO DETAIL NO. 2 ON SHEET 31 FOR BIO-RETENTION FACILITY CONSTRUCTION SEQUENCE.

14. REMOVE SILT FENCE ONLY AFTER FINAL STABILIZATION IS COMPLETE (SEE STANDARD NOTE NO. 16 ON SHEET 31).

15. RESTABILIZE AREA DISTURBED DUE TO THE REMOVAL OF TEMPORARY EROSION CONTROL FACILITIES.

LEGEND

- LdB2 / ReB2 – SOILS LINE
- 358 – EXISTING CONTOUR
- 360 – EXISTING INDEX CONTOUR
- EXISTING TREE CANOPY
- INFILTRATION TEST LOCATION
- EXISTING WETLANDS
- W – 2" DIP WATER
- ELECTRIC
- STORM SEWER
- SANITARY SEWER
- RIP-RAP APRON
- 358 – PHASE 3 CONTOUR
- 360 – PHASE 3 INDEX CONTOUR
- SS – SUPER FILTER FABRIC FENCE
- 18 – 18" FILTER FABRIC FENCE
- STORMWATER SHED LINE
- ROCK CONSTRUCTION ENTRANCE
- TOPSOIL STOCKPILE
- LIMITS OF DISTURBANCE
- ROCK RIP-RAP
- EROSION CONTROL BLANKET OR TURF REINFORCEMENT MAT (SEE SWALE & EMERGENCY SPILLWAY DETAILS)
- FLEXTERRA FLEXIBLE GROWTH MEDIUM
- 24" SILT SOCK
- PROPOSED TREE CLEAR LINE

HIBBELN ENGINEERING COMPANY, L.L.C.
CONSULTING ENGINEERS
215·619·9070 PA, NJ, MD & DE
593 Skippack Pike, Suite 300
Blue Bell, Pennsylvania 19422
www.hibbelnengineering.com
IN CONJUNCTION WITH:
LandConcepts
593 Skippack Pike • Suite 300 • Blue Bell, PA 19422

COOK TRACT ATHLETIC FIELDS

PREPARED FOR
WHITPAIN TOWNSHIP
SITE SITUATE IN
WHITPAIN TOWNSHIP
MONTGOMERY COUNTY, PENNSYLVANIA

ALL DOCUMENTS PREPARED BY HIBBELN ENGINEERING COMPANY, L.L.C. ARE INSTRUMENTS OF SERVICE IN RESPECT OF THE PROJECT. THEY ARE NOT INTENDED OR REPRESENTED TO BE SUITABLE FOR REUSE BY OWNER OR OTHERS ON EXTENSIONS OF THE PROJECT OR ON ANY OTHER PROJECT. ANY REUSE WITHOUT WRITTEN VERIFICATION OR ADAPTATION BY HIBBELN ENGINEERING COMPANY, L.L.C. FOR THE SPECIFIC PURPOSE INTENDED WILL BE AT OWNERS SOLE RISK AND WITHOUT LIABILITY OR LEGAL EXPOSURE TO HIBBELN ENGINEERING COMPANY, L.L.C.; AND OWNER SHALL INDEMNIFY AND HOLD HARMLESS HIBBELN ENGINEERING COMPANY, L.L.C. FROM ALL CLAIMS, DAMAGES, LOSSES AND EXPENSES ARISING OUT OF OR RESULTING THEREFROM.

NO.	REVISIONS	
6	PER ADDITION OF SEDIMENT BASIN B PHASE 4 PLAN	JUNE 18, 2012
5	PER MCCD LETTER (2-9-12)	FEBRUARY 10, 2012
4	PER STORM SYTEM 'B'	JANUARY 31, 2012
3	PER MCCD LETTER (1/3/12)	JANUARY 5, 2012
2	PER SANITARY SEWER RELOCATION	DECEMBER 19, 2011
1	100% COMPLETION PLAN	NOVEMBER 22, 2011
	PLAN ORIGINATION DATE	AUGUST 26, 2011

HIBBELN ENGINEERING COMPANY, L.L.C. CONSULTING ENGINEERS

PHASE 4 EROSION AND SEDIMENTATION CONTROL PLAN

COOK TRACT
ATHLETIC FIELDS
SITE SITUATE IN
WHITPAIN TOWNSHIP
MONTGOMERY COUNTY, PENNSYLVANIA

PROJECT MANAGER: DSC/AJH	DRAFTED BY: MLW
PROJECT NUMBER: 12460	DRAWING FILE: #12460_SHT28A
PLAN SCALE: 1"=100'	PLAN SHEET NUMBER 28A OF 38

0' 50' 100' 200'
GRAPHIC SCALE

EROSION CONTROL STANDARD NOTES

1. VEHICLES AND EQUIPMENT MAY NEITHER ENTER DIRECTLY TO NOR EXIT DIRECTLY FROM DEKALB PIKE.

2. STOCKPILE HEIGHTS MUST NOT EXCEED 35 FEET. STOCKPILE SLOPES MUST BE 2:1 OR FLATTER.

3. THE OPERATOR SHALL ASSURE THAT THE APPROVED EROSION AND SEDIMENT CONTROL PLAN IS PROPERLY AND COMPLETELY IMPLEMENTED.

4. UNTIL THE SITE ACHIEVES FINAL STABILIZATION, THE PERMITTEE AND CO-PERMITTEE SHALL ASSURE THAT THE BEST MANAGEMENT PRACTICES ARE IMPLEMENTED, OPERATED, AND MAINTAINED PROPERLY AND COMPLETELY. MAINTENANCE SHALL INCLUDE INSPECTIONS OF ALL BEST MANAGEMENT PRACTICE FACILITIES AND MAINTAIN AND MAKE AVAILABLE TO THE MONTGOMERY COUNTY CONSERVATION DISTRICT COMPLETE, WRITTEN INSPECTION LOGS OF ALL THOSE INSPECTIONS. ALL MAINTENANCE WORK, INCLUDING CLEANING, REPAIR, REPLACEMENT, REGARDING, RE-SEEDING, AND RE-STABILIZATION SHALL BE PERFORMED IMMEDIATELY.

5. IMMEDIATELY UPON DISCOVERING UNFORESEEN CIRCUMSTANCES POSING THE POTENTIAL FOR ACCELERATED EROSION AND/OR SEDIMENT POLLUTION, THE OPERATOR SHALL IMPLEMENT APPROPRIATE BEST MANAGEMENT PRACTICES TO ELIMINATE POTENTIAL FOR ACCELERATED EROSION AND/OR SEDIMENT POLLUTION.

6. BEFORE INITIATING ANY REVISIONS TO THE APPROVED EROSION AND SEDIMENT CONTROL PLAN OR REVISIONS TO OTHER PLANS WHICH MAY AFFECT THE EFFECTIVENESS OF THE APPROVED E&S CONTROL PLAN, THE OPERATOR MUST RECEIVE APPROVAL OF THE REVISIONS FROM THE MONTGOMERY COUNTY CONSERVATION DISTRICT.

7. THE OPERATOR SHALL ASSURE THAT AN EROSION AND SEDIMENT CONTROL PLAN HAS BEEN PREPARED, APPROVED BY THE APPROPRIATE CONSERVATION DISTRICT, AND IS BEING IMPLEMENTED AND MAINTAINED FOR ALL SOIL AND/OR ROCK SPOIL AND BORROW AREAS, REGARDLESS OF THEIR LOCATIONS.

8. ALL PUMPING OF SEDIMENT LADEN WATER SHALL BE THROUGH A SEDIMENT CONTROL BMP, SUCH AS A PUMPED WATER FILTER BAG DISCHARGING OVER NON-DISTURBED AREAS.

9. THE CONTRACTOR IS ADVISED TO BECOME THOROUGHLY FAMILIAR WITH THE PROVISIONS OF THE APPENDIX 64, EROSION CONTROL RULES AND REGULATIONS, TITLE 25, PART 1, DEPARTMENT OF ENVIRONMENTAL PROTECTION, SUBPART C, PROTECTION OF NATURAL RESOURCES, ARTICLE III, WATER RESOURCES, CHAPTER 102, EROSION CONTROL.

10. A COPY OF THE APPROVED EROSION AND SEDIMENT CONTROL PLAN MUST BE AVAILABLE AT THE PROJECT SITE AT ALL TIMES.

11. EROSION AND SEDIMENT BMP'S MUST BE CONSTRUCTED, STABILIZED, AND FUNCTIONAL BEFORE SITE DISTURBANCE BEGINS WITHIN THE TRIBUTARY AREAS OF THOSE BMP'S.

12. AFTER FINAL SITE STABILIZATION HAS BEEN ACHIEVED, TEMPORARY EROSION AND SEDIMENT BMP CONTROLS MUST BE REMOVED. AREAS DISTURBED DURING REMOVAL OF THE BMP'S MUST BE STABILIZED IMMEDIATELY.

13. THE PERMITTEE OR CO-PERMITTEE SHALL CONTACT THE DEPARTMENT OR AUTHORIZED CONSERVATION DISTRICT AT LEAST SEVEN DAYS BEFORE CONSTRUCTION IS TO BEGIN TO DETERMINE IF A PRE-CONSTRUCTION CONFERENCE IS REQUIRED. THE PERMITTEE, CO_PERMITTEE, AND OTHERS UNDERTAKING THE EARTH DISTURBANCE ACTIVITY MUST ATTEND A PRE-CONSTRUCTION CONFERENCE WHEN REQUESTED BY THE DEPARTMENT OR AUTHORIZED CONSERVATION DISTRICT. THE PERMITTEE OR CO-PERMITTEE MUST BRING A COPY OF THEIR NPDES PERMIT, A COPY OF THE STAMPED PLAN FROM THE CONSERVATION DISTRICT, AND ALL ASSOCIATED DEPARTMENT APPROVALS/PERMITS WHICH MUST BE AVAILABLE AT THE CONFERENCE UPON REQUEST. ALSO, AT LEAST 3 DAYS BEFORE STARTING ANY EARTH DISTURBANCE ACTIVITIES, ALL CONTRACTORS INVOLVED IN THOSE ACTIVITIES SHALL NOTIFY THE PENNSYLVANIA ONE CALL SYSTEM INCORPORATED AT 1-800-242-1776 FOR BURIES UTILITIES LOCATIONS.

14. UPON THE INSTALLATION OR STABILIZATION OF ALL PERIMETER SEDIMENT CONTROL BMPS AND AT LEAST 3 DAYS PRIOR TO PROCEEDING WITH THE BULK EARTH DISTURBANCE ACTIVITIES, THE PERMITTEE OR CO-PERMITTEE SHALL PROVIDE NOTIFICATION TO THE DEPARTMENT OR AUTHORIZED CONSERVATION DISTRICT.

15. IMMEDIATELY AFTER EARTH DISTURBANCE ACTIVITIES CEASE, THE OPERATOR SHALL STABILIZE ANY AREAS DISTURBED BY THE ACTIVITIES. DURING NON-GERMINATING PERIODS, MULCH MUST BE APPLIED AT THE SPECIFIED RATES. DISTURBED AREAS WHICH ARE NOT AT FINISHED GRADE AND WHICH WILL BE RE-DISTURBED WITHIN ONE YEAR MUST BE STABILIZED IN ACCORDANCE WITH THE TEMPORARY VEGETATIVE STABILIZATION SPECIFICATIONS. DISTURBED AREAS WHICH ARE AT FINISHED GRADE OR WHICH WILL NOT BE RE-DISTURBED WITHIN ONE YEAR MUST BE STABILIZED IN ACCORDANCE WITH THE PERMANENT VEGETATIVE STABILIZATION SPECIFICATIONS.

16. AN AREA SHALL BE CONSIDERED TO HAVE ACHIEVED FINAL STABILIZATION WHEN IT HAS A MINIMUM UNIFORM 70% PERENNIAL VEGETATIVE COVER OR OTHER PERMANENT NON-VEGETATIVE COVER WITH A DENSITY SUFFICIENT TO RESIST ACCELERATED SURFACE EROSION AND SUBSURFACE CHARACTERISTICS SUFFICIENT TO RESIST SLIDING AND OTHER MOVEMENTS.

17. PERMITTEE'S AND CO_PERMITTEES ARE RESPONSIBLE FOR ENSURING THAT A LICENSED PROFESSIONAL HAVE OVERSIGHT RESPONSIBILITIES FOR THE DESIGN AND PROPER INSTALLATION OF BMPS IDENTIFIED IN THE PCSM PLAN PRIOR TO THE SUBMISSION OF THE NOT FOR THIS PERMIT. THE LICENSED PROFESSIONAL SHALL CERTIFY THAT THE BMPS IDENTIFIED IN THE PLAN HAVE BEEN INSTALLED IN ACCORDANCE WITH THE APPROVED PLAN THE INSTALLATION SCHEDULE OF PCSM BMPS AND MAINTENANCE REQUIREMENTS CONTAINED WITHIN THE APPROVED PCSM PLAN MUST BE FOLLOWED; AND FAILURE TO COMPLY WITH THE INSTALLATION SCHEDULE IS A VIOLATION OF THIS PERMIT, THE CLEAN STREAMS LAW, AND THE CLEAN WATER ACT.

18. APPROVAL OF THE USE OF SKIMMERS DOES NOT APPROVE USE OF ANY SKIMMERS IN VIOLATION OF ANY PATENT, PATENT RIGHTS, AND/OR PATENT LAWS.

19. BAFFLES MUST BE INSTALLED TO ALLOW BASIN MAINTENANCE AND CLEAN OUT.

20. UPON INSTALLATION OF THE TEMPORARY SEDIMENT BASIN RISER(S), AN IMMEDIATE INSPECTION SHALL BE DONE BY A QUALIFIED SITE REPRESENTATIVE AND THE MONTGOMERY COUNTY CONSERVATION DISTRICT SHALL BE NOTIFIED IN WRITING THAT THE RISER IS SEALED.

21. SEDIMENT BASINS MUST BE STRUCTURALLY SOUND AND PROTECTED FROM UNAUTHORIZED ACTS OF THIRD PARTIES.

22. AT STREAM CROSSINGS, 50' BUFFER AREAS SHOULD BE MAINTAINED. ON BUFFERS, CLEARING, SOD DISTURBANCES, EXCAVATION, AND EQUIPMENT TRAFFIC SHOULD BE MINIMIZED. ACTIVITIES SUCH AS STACKING LOGS, BURNING CLEARED BRUSH, DISCHARGING RAINWATER FROM TRENCHES, WELDING PIPE SECTIONS, REFUELING AND MAINTAINING EQUIPMENT SHOULD BE ACCOMPLISHED OUTSIDE OF BUFFERS.

23. HAY OR STRAW MULCH MUST BE APPLIED AT 3.0 TONS PER ACRE.

24. MULCH WITH MULCH CONTROL NETTING OR EROSION CONTROL BLANKETS MUST BE INSTALLED ON ALL SLOPES 3:1 OR STEEPER.

25. STRAW MULCH SHALL BE APPLIED IN LONG STRANDS, NOT CHOPPED OR FINELY BROKEN.

26. UNTIL THE SITE IS STABILIZED, ALL EROSION AND SEDIMENT BMP'S MUST BE MAINTAINED PROPERLY. MAINTENANCE MUST INCLUDE INSPECTIONS OF ALL EROSION AND SEDIMENT CONTROL BMP'S AFTER EACH RUNOFF EVENT AND ON A WEEKLY BASIS. ALL PREVENTATIVE AND REMEDIAL MAINTENANCE WORK, INCLUDING CLEAN OUT, REPAIR, REPLACEMENT, REGARDING, RE-SEEDING, RE-MULCHING, AND RE-NETTING, MUST BE DONE IMMEDIATELY. IF EROSION AND SEDIMENT CONTROL BMP'S FAIL TO PERFORM AS EXPECTED, REPLACEMENT BMP'S, OR MODIFICATIONS TO THOSE INSTALLED WILL BE REQUIRED.

27. SEDIMENT REMOVED FROM BMP'S SHALL BE DISPOSED OF IN LANDSCAPE AREAS OUTSIDE OF STEEP SLOPES, WETLANDS, FLOODPLAINS OR DRAINAGE SWALES AND IMMEDIATELY STABILIZED, OR PLACED IN TOPSOIL STOCKPILES.

28. THE OPERATOR SHALL REMOVE FROM THIS SITE, RECYCLE, OR DISPOSE OF ALL BUILDING MATERIALS AND WASTES IN ACCORDANCE WITH THE DEPARTMENT'S SOLID WASTE MANAGEMENT REGULATIONS AT 25 PA. CODE 260.1 ET SEQ., 271.1 ET SEQ. THE CONTRACTOR SHALL NOT ILLEGALLY BURY, DUMP, OR DISCHARGE ANY BUILDING MATERIAL OR WASTES AT THIS SITE.

29. AN E&S PLAN SHALL BE SUBMITTED TO THE DEPARTMENT OR AUTHORIZED CONSERVATION DISTRICT AND IMPLEMENTED FOR ALL SPOIL AND BORROW AREAS, REGARDLESS OF THEIR LOCATION.

30. THE NPDES BOUNDARY IS EQUAL TO THE LIMITS OF DISTURBANCE OF THE SITE AND ANY OFF-SITE AREAS WITHIN THE LIMITS OF DISTURBANCE THAT ARE THE RESPONSIBILITY OF THE DEVELOPER TO INSTALL. OFF-SITE FACILITIES SUCH AS: UTILITIES AND ROADWAYS.

31. THE PROJECT RECEIVING WATERCOURSE IS THE STONY CREEK. THE CHAPTER 93 CLASSIFICATION IS TSF.

32. UPON COMPLETION OR TEMPORARY CESSATION OF THE EARTH DISTURBANCE ACTIVITY THE PROJECT SITE SHALL BE IMMEDIATELY STABILIZED IN ACCORDANCE WITH THE RECOMMENDATIONS CONTAINED IN THE EROSION AND SEDIMENT POLLUTION CONTROL PROGRAM MANUAL (E&S MANUAL), COMMONWEALTH OF PENNSYLVANIA, DEPARTMENT OF ENVIRONMENTAL PROTECTION NO. 363-2134-008, APRIL 2000, AS AMENDED AND UPDATED. EROSION AND SEDIMENT CONTROL BMPS SHALL BE IMPLEMENTED AND MAINTAINED UNTIL PERMANENT STABILIZATION IS COMPLETED AND PCSM BMPS ARE OPERATIONAL.

33. THE CONTRACTOR SHALL CREATE AND MAINTAIN A PREPAREDNESS PREVENTION AND CONTINGENCY (PPC) PLAN. THE CONTRACTOR SHALL KEEP ON HAND SUCH PPC PLAN ON SITE AT ALL TIMES.

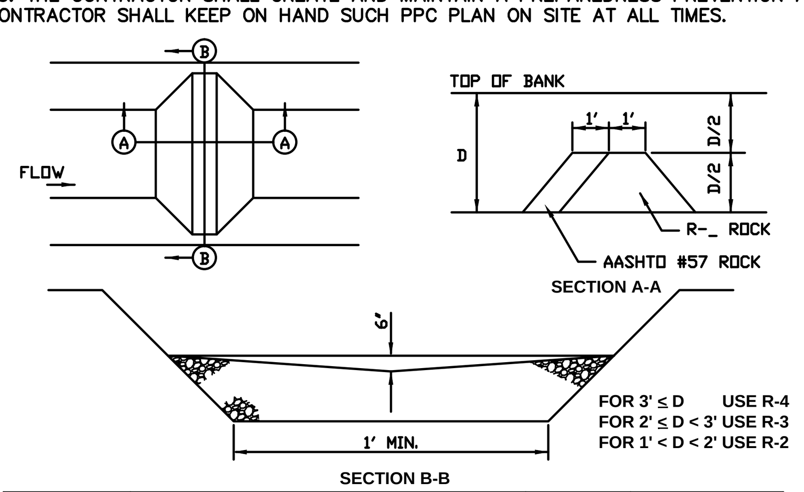

ROCK FILTER NO.	LOCATION	D (FT)	RIPRAP SIZE
A	SEE PLAN	2	R-3

Sediment must be removed when accumulations reach 1/2 the height of the filters.

Immediately upon stabilization of each channel, remove accumulated sediment, remoe Rock Filter, and stabilize disturbed areas.

1A/29 ROCK FILTER (SCD #23) NOT TO SCALE

RESPONSIBILITIES FOR FILL MATERIALS

IF THE SITE WILL NEED TO IMPORT OR EXPORT MATERIAL FROM THE SITE, THE RESPONSIBILITY FOR PERFORMING ENVIRONMENTAL DUE DILIGENCE AND DETERMINATION OF CLEAN FILL WILL REST WITH THE APPLICANT.

CLEAN FILL IS DEFINED AS: UNCONTAMINATED, NON-WATER SOLUBLE, NON-DECOMPOSABLE, INERT, SOLID MATERIAL. THE TERM INCLUDES SOIL, ROCK, STONE, DREDGED MATERIAL, USED ASPHALT, AND BRICK, BLOCK OR CONCRETE FROM CONSTRUCTION AND DEMOLITION ACTIVITIES THAT IS SEPARATE FROM OTHER WASTE AND IS RECOGNIZABLE AS SUCH. THE TERM DOES NOT INCLUDE MATERIALS PLACED IN OR ON THE WATERS OF THE COMMONWEALTH UNLESS OTHERWISE AUTHORIZED. (THE TERM "USED ASPHALT" DOES NOT INCLUDE MILLED ASPHALT OR ASPHALT THAT HAS BEEN PROCESSED FOR RE-USE).

CLEAN FILL AFFECTED BY A SPILL OR RELEASE OF A REGULATED SUBSTANCE: FILL MATERIALS AFFECTED BY A SPILL OR RELEASE OF A REGULATED SUBSTANCE STILL QUALIFIES AS CLEAN FILL PROVIDED THE TESTING REVEALS THAT THE FILL MATERIAL CONTAINS CONCENTRATIONS OF REGULATED SUBSTANCES THAT ARE BELOW THE RESIDENTIAL LIMITS IN TABLES FP-1A AND FP-1B FOUND IN THE DEPARTMENT'S POLICY "MANAGEMENT OF FILL".

ANY PERSON PLACING CLEAN FILL THAT HAS BEEN AFFECTED BY A SPILL OR RELEASE OF A REGULATED SUBSTANCE MUST USE FORM FP-001 TO CERTIFY THE ORIGIN OF THE FILL MATERIAL AND THE RESULTS OF THE ANALYTICAL TESTING TO QUALIFY THE MATERIAL AS CLEAN FILL. FORM FP-001 MUST BE RETAINED BY THE OWNER OF THE PROPERTY RECEIVING THE FILL. A COPY OF FORM FP-001 CAN BE FOUND AT THE END OF THESE INSTRUCTIONS.

ENVIRONMENTAL DUE DILIGENCE: THE APPLICANT MUST PERFORM ENVIRONMENTAL DUE DILIGENCE TO DETERMINE IF THE FILL MATERIALS ASSOCIATED WITH THE PROJECT QUALIFY AS CLEAN FILL. ENVIRONMENTAL DUE DILIGENCE IS DEFINED AS: INVESTIGATIVE TECHNIQUES, INCLUDING, BUT NOT LIMITED TO, VISUAL PROPERTY INSPECTIONS, ELECTRONIC DATA BASE SEARCHES, REVIEW OF PROPERTY OWNERSHIP, REVIEW OF PROPERTY USE HISTORY, SANBORN MAPS, ENVIRONMENTAL QUESTIONNAIRES, TRANSACTION SCREENS, ANALYTICAL TESTING, ENVIRONMENTAL ASSESSMENTS OR AUDITS. ANALYTICAL TESTING IS NOT A REQUIRED PART OF DUE DILIGENCE UNLESS VISUAL INSPECTION AND/OR REVIEW OF THE PAST LAND USE OF THE PROPERTY INDICATES THAT THE FILL MAY HAVE BEEN SUBJECTED TO A SPILL OR RELEASE OF REGULATED SUBSTANCE. IF THE FILL MAY HAVE BEEN AFFECTED BY A SPILL OR RELEASE OF A REGULATED SUBSTANCE, IT MUST BE TESTED TO DETERMINE IF IT QUALIFIES AS CLEAN FILL. TESTING SHOULD BE PERFORMED IN ACCORDANCE WITH APPENDIX A OF THE DEPARTMENT'S POLICY "MANAGEMENT OF FILL".

FILL MATERIAL THAT DOES NOT QUALIFY AS CLEAN FILL IS REGULATED FILL. REGULATED FILL IS WASTE AND MUST BE MANAGED IN ACCORDANCE WITH THE DEPARTMENT'S MUNICIPAL OR RESIDUAL WASTE REGULATIONS BASED ON 25 PA. CODE CHAPTERS 287 RESIDUAL WASTE MANAGEMENT OR 271 MUNICIPAL WASTE MANAGEMENT, WHICHEVER IS APPLICABLE.

SOILS RESOLUTIONS

1. LOW PH: FOR SOILS WITH PH VALUES LOWER THAN 5.5, ADJUST PH BY APPLYING LIME AT RATES DETERMINED BY SOILS TESTING IN COMBINATION WITH SELECTING AND PLANTING VEGETATIVE SPECIES TOLERANT OF ACIDIC CONDITIONS.

2. LOW FERTILITY: INCORPORATE ADDITIONAL SOIL NUTRIENTS AT RATES DETERMINED BY SOIL TESTING IN COMBINATION WITH SELECTING AND PLANTING VEGETATIVE SPECIES TOLERANT OF LOW FERTILITY CONDITIONS.

3. DRY OR DROUGHTY SOILS: SELECT VEGETATIVE SPECIES TOLERANT OF DRY CONDITIONS.

4. HIGH WATER TABLE OR WET/HYDRIC SOILS PRONE TO FLOODING: SELECT VEGETATIVE SPECIES TOLERANT OF WET CONDITIONS. IF BUILDINGS ARE LOCATED IN SAID SOILS PROVIDE SUMP PUMPS WITH BACK FLOW PREVENTION DEVICES IN BASEMENTS. IF HIGH WATER IS ENCOUNTERED DURING CONSTRUCTION, CONTRACTOR SHALL UTILIZE PUMPED WATER FILTRATION METHODS (ie. DIRT BAG). FOR BASIN CONSTRUCTION IN AREAS OF WET SOILS, PREFERABLY RELOCATE STORMWATER AND SEDIMENT BASINS AND FACILITIES IN SOILS MORE CONDUCIVE TO SUCH FACILITIES. IF FACILITIES CAN NOT BE RELOCATED, PROVIDE PUMPED WATER SEDIMENT REMOVAL FACILITIES FOR BASIN CONSTRUCTION, LIMIT RESERVOIR DEPTHS, AND LIMIT CLEAN OUT ELEVATIONS.

5. ERODIBLE SOILS TYPES: FOR SOILS WITH ERODIBILITY VALUES HIGHER THAN 0.36, CONTRACTOR SHOULD INCORPORATE SOME OR ALL OF THE FOLLOWING STABILIZATION TECHNIQUES. IN PROPOSED CHANNELS, PROVIDE TEMPORARY LININGS UNTIL GRASS IS ESTABLISHED, PROVIDE PERMANENT GRASS REINFORCED LININGS THROUGH THE INSTALLATION OF SOD OR SELECT PERMANENT LININGS OTHER THAN GRASSES. DECREASE CHANNEL GRADES AND INCREASE CHANNEL WIDTHS TO HELP REDUCE EROSION.

6. SOILS PRONE TO SINKHOLES AND SOLUTION CHANNELS: LOCATE STORMWATER RETENTION FACILITIES, SEDIMENT TRAPS AND BASINS, ON OTHER SOILS TYPES. IF FACILITIES MUST BE LOCATED IN SINKHOLE SUSCEPTIBLE SOILS, LINE RESERVOIR AREA WITH PLASTIC, CLAY, BENTONITE, OR OTHER ACCEPTABLE LININGS. LIMIT STANDING WATER DEPTHS AND RETENTION TIMES.

7. SOILS PRONE TO INSTABILITY PIPING AND SEEPING: IF STORMWATER OR SEDIMENT BASIN/TRAPS CAN NOT BE RELOCATED TO OTHER SOILS TYPES, LIMIT EMBANKMENT SLOPE STEEPNESS, PROVIDE CLAY EMBANKMENT CORES AND IMPORT OTHER SOILS FOR CONSTRUCTION OF EMBANKMENT FACILITIES AS NECESSARY.

8. SOILS UNSUITABLE FOR WINTER GRADING, PRONE TO FROST ACTION, OR DIFFICULT TO COMPACT: GRADING DURING PERIODS PRONE TO FROST SHOULD BE LIMITED. CONSTRUCTION OF STRUCTURAL EMBANKMENT SHOULD BE PERFORMED DURING THE PERIOD OF MAY TO OCTOBER IF SUCH FACILITIES CAN NOT BE RELOCATED TO AN AREA WITH MORE CONDUCIVE SOILS.

9. UNSUITABLE TOPSOIL: IF SUITABLE TOPSOIL IS NOT FOUND ON-SITE, TOPSOIL SHALL BE IMPORTED.

MONITORING, INSPECTION AND REPORTING REQUIRMENTS

VISUAL INSPECTIONS

THE PERMITTEE AND CO_PERMITTEE(S) MUST ENSURE THAT VISUAL SITE INSPECTIONS ARE CONDUCTED WEEKLY, AND WITHIN 24 HOURS AFTER EACH MEASURABLE RAINFALL EVENT THROUGHOUT THE DURATION OF CONSTRUCTION AND UNTIL THE RECEIPT AND ACKNOWLEDGEMENT OF THE NOT BY THE DEPARTMENT OR AUTHORIZED CONSERVATION DISTRICT. THE VISUAL SITE INSPECTIONS AND REPORTS SHALL BE COMPLETED IN A FORMAT PROVIDED BY THE DEPARTMENT, AND CONDUCTED BY QUALIFIED PERSONNEL, TRAINED AND EXPERIENCED IN EROSION AND SEDIMENT CONTROL, TO ASCERTAIN THAT E&S BMPS AND PCSM BMPS ARE PROPERLY CONSTRUCTED AND MAINTAINED TO EFFECTIVELY MINIMIZE POLLUTION TO THE WATERS OF THIS COMMONWEALTH. A WRITTEN REPORT OF EACH INSPECTION SHALL BE KEPT AND INCLUDE AT A MINIMUM:

(1) A SUMMARY OF SITE CONDITIONS, E&S BMP AND PCSM BMP, IMPLEMENTATION AND MAINTENANCE AND COMPLIANCE ACTIONS; AND

(2) THE DATE, TIME, NAME AND SIGNATURE OF THE PERSON CONDUCTING THE INSPECTION.

NONCOMPLIANCE REPORTING

WHERE E&S, PCSM OR PPC BMPS ARE FOUND TO BE INOPERATIVE OR INEFFECTIVE DURING AN INSPECTION, OR ANY OTHER TIME, THE PERMITTEE AND CO_PERMITTEE(S) SHALL, WITHIN 24 HOURS, CONTACT THE DEPARTMENT OR AUTHORIZED CONSERVATION DISTRICT, BY PHONE OR PERSONAL CONTACT, FOLLOWED BY THE SUBMISSION OF A WRITTEN REPORT WITHIN 5 DAYS OF THE INITIAL CONTACT. NONCOMPLIANCE REPORTS SHALL INCLUDE THE FOLLOWING INFORMATION:

(1) ANY CONDITION ON THE PROJECT SITE WHICH MAY ENDANGER PUBLIC HEALTH, SAFETY, OR THE ENVIRONMENT, OR INVOLVE INCIDENTS WHICH CAUSE OR THREATEN POLLUTION;

(2) THE PERIOD OF NONCOMPLIANCE, INCLUDING EXACT DATES AND TIMES AND/OR ANTICIPATED TIME WHEN THE ACTIVITY WILL RETURN TO COMPLIANCE;

(3) STEPS BEING TAKEN TO REDUCE, ELIMINATE, AND PREVENT RECURRENCE OF THE NONCOMPLIANCE; AND

(4) THE DATE OR SCHEDULE OF DATES, AND IDENTIFYING REMEDIES FOR CORRECTING NONCOMPLIANCE CONDITIONS.

REDUCTION, LOSS, OR FAILURE OF THE BMPS

UPON REDUCTION, LOSS, OR FAILURE OF THE BMPS, THE PERMITTEE AND CO_PERMITTEE SHALL TAKE IMMEDIATE ACTION TO RESTORE THE BMPS OR PROVIDE AN ALTERNATIVE METHOD OF TREATMENT. SUCH RESTORED BMPS OR ALTERNATIVE TREATMENT SHALL BE AT LEAST AS EFFECTIVE AS THE ORIGINAL BMPS.

TERMINATION OF COVERAGE

NOT: UPON PERMANENT STABILIZATION OF EARTH DISTURBANCE ACTIVITIES ASSOCIATED WITH CONSTRUCTION ACTIVITY THAT ARE AUTHORIZED BY THIS PERMIT AND WHEN BMPS IDENTIFIED IN THE PCSM PLAN HAVE BEEN PROPERLY INSTALLED, THE PERMITTEE AND/OR CO_PERMITTEE OF THE FACILITY MUST SUBMIT A NOT FORM THAT IS SIGNED IN ACCORDANCE WITH PART B, SECTION 1.C, SIGNATORY REQUIREMENTS, OF THIS PERMIT. ALL LETTERS CERTIFYING DISCHARGE TERMINATION ARE TO BE SENT TO THE DEPARTMENT OR AUTHORIZED CONSERVATION DISTRICT. THE NOT MUST CONTAIN THE FOLLOWING INFORMATION: FACILITY NAME, ADDRESS, AND LOCATION, OPERATOR NAME AND ADDRESS, PERMIT NUMBER, IDENTIFICATION AND PROOF OF ACKNOWLEDGMENT FROM THE PERSON(S) WHO WILL BE RESPONSIBLE FOR OPERATION AND MAINTENANCE OF THE PCSM BMPS IN ACCORDANCE WITH THE APPROVED PCSM PLAN, AND THE REASON FOR PERMIT TERMINATION. UNTIL THE PERMITTEE HAS RECEIVED WRITTEN ACKNOWLEDGEMENT OF THE NOT, THE PERMITTEE WILL REMAIN RESPONSIBLE FOR OPERATING AND MAINTAINING ALL E&S BMPS AND PCSM BMPS ON THE PROJECT SITE AND WILL BE RESPONSIBLE FOR VIOLATIONS OCCURRING ON THE PROJECT SITE.

COMPLETION CERTIFICATE AND FINAL PLANS

WITHIN 30 DAYS AFTER THE COMPLETION OF EARTH DISTURBANCE ACTIVITIES AUTHORIZED BY THIS PERMIT, INCLUDING THE PERMANENT STABILIZATION OF THE SITE AND PROPER INSTALLATION OF PCSM BMPS IN ACCORDANCE WITH THE APPROVED PCSM PLAN, OR UPON SUBMISSION OF THE NOT IF SOONER, THE PERMITTEE SHALL FILE WITH THE DEPARTMENT OR AUTHORIZED CONSERVATION DISTRICT A STATEMENT SIGNED BY A LICENSED PROFESSIONAL AND BY THE PERMITTEE CERTIFYING THAT WORK HAS BEEN PERFORMED IN ACCORDANCE WITH THE TERMS AND CONDITIONS OF THIS PERMIT AND THE APPROVED E&S AND PCSM PLANS.

STABILIZATION NOTES

1. MULCH WITH MULCH CONTROL NETTING OR EROSION CONTROL BLANKETS MUST BE INSTALLED ON ALL SLOPES 3:1 OR STEEPER.

2. HAY OR STRAW MULCH MUST BE APPLIED AT 3.0 TONS PER ACRE.

3. STRAW MULCH SHALL BE APPLIED IN LONG STRANDS, NOT CHOPPED OR FINELY BROKEN.

4. SEDIMENT REMOVED FROM BMP'S SHALL BE DISPOSED OF IN LANDSCAPE AREAS OUTSIDE OF STEEP SLOPES, WETLANDS, FLOODPLAINS OR DRAINAGE SWALES AND IMMEDIATELY STABILIZED, OR PLACED IN TOPSOIL STOCKPILES.

5. THE OPERATOR SHALL REMOVE FROM THIS SITE, RECYCLE, OR DISPOSE OF ALL BUILDING MATERIALS AND WASTES IN ACCORDANCE WITH THE DEPARTMENT'S SOLID WASTE MANAGEMENT REGULATIONS AT 25 PA CODE 260.1 ET SEQ., 271.1 ET SEQ. THE CONTRACTOR SHALL NOT ILLEGALLY BURY, DUMP, OR DISCHARGE ANY BUILDING MATERIAL OR WASTES AT THIS SITE.

SITE STABILIZATION AND SEEDING NOTES

PERMANENT CONTROL MEASURES

TO INSURE AGAINST EROSION AFTER THE PROJECT HAS BEEN COMPLETED, LAWN AND SWALE AREAS SHALL BE PERMANENTLY SEEDED AS PER APPENDIX 'A'.

APPENDIX A: TEMPORARY SEEDING

TYPE OF COVER AND SPECIES OR MIXTURES	AMOUNT PER 1,000 SF	SEEDING RATES AMOUNT PER ACRE
#1 RYE GRASS	1 LB.	20-40 LBS.
#2 SPRING OATS	2.5 LB.	96 LBS.
#3 WINTER RYE	3.4 LB.	140 LBS.

RECOMMENDED FERTILIZATION RATE

FERTILIZER - 300 LBS 10-20-10 / ACRE
MULCH - 3 TONS PER ACRE

PERMANENT SEEDING

SEE PLANT SCHEDULE ON LANDSCAPE PLAN FOR PERMANENT SEEDING SPECIFICATIONS.

RECOMMENDED FERTILIZATION RATE
FERTILIZER: 12-24-10
(25% SLOW RELEASE)
300 LBS/AC.

LIME: AS REQUIRED PER SOIL TEST

MULCH: 3 TONS PER ACRE

UTILITY LINE TRENCH EXCAVATION NOTES

1. LIMIT ADVANCED CLEARING AND GRUBBING OPERATIONS TO A DISTANCE EQUAL TO TWO TIMES THE LENGTH OF PIPE INSTALLATION THAT CAN BE COMPLETED IN ONE DAY.
2. WORK CREWS AND EQUIPMENT FOR TRENCHING, PLACEMENT OF PIPE, PLUG CONSTRUCTION AND BACKFILLING WILL BE SELF CONTAINED AND SEPARATE FROM CLEARING AND GRUBBING AND SITE RESTORATION AND STABILIZATION OPERATIONS.
3. ALL SOIL EXCAVATED FROM THE TRENCH WILL BE PLACED ON THE UPHILL SIDE OF THE TRENCH.
4. LIMIT DAILY TRENCH EXCAVATION TO THE LENGTH OF PIPE PLACEMENT, PLUG INSTALLATION AND BACKFILLING THAT CAN BE COMPLETED THE SAME DAY.
5. WATER WHICH ACCUMULATES IN THE OPEN TRENCH WILL BE COMPLETELY REMOVED BY PUMPING BEFORE PIPE PLACEMENT AND / OR BACKFILLING BEGINS. WATER REMOVED FROM THE TRENCH SHALL BE PUMPED THROUGH A FILTRATION DEVICE.
6. ON THE DAY FOLLOWING PIPE PLACEMENT AND TRENCH BACKFILLING, THE DISTURBED AREA WILL BE GRADED TO FINAL CONTOURS AND IMMEDIATELY STABILIZED.
7. SOILS EXCAVATED FROM EXISTING SURFACE LAYER SHOULD BE STOCKPILED SEPARATELY AND RETURNED AS FINAL SURFACE LAYER FOLLOWING TRENCH BACKFILLING.

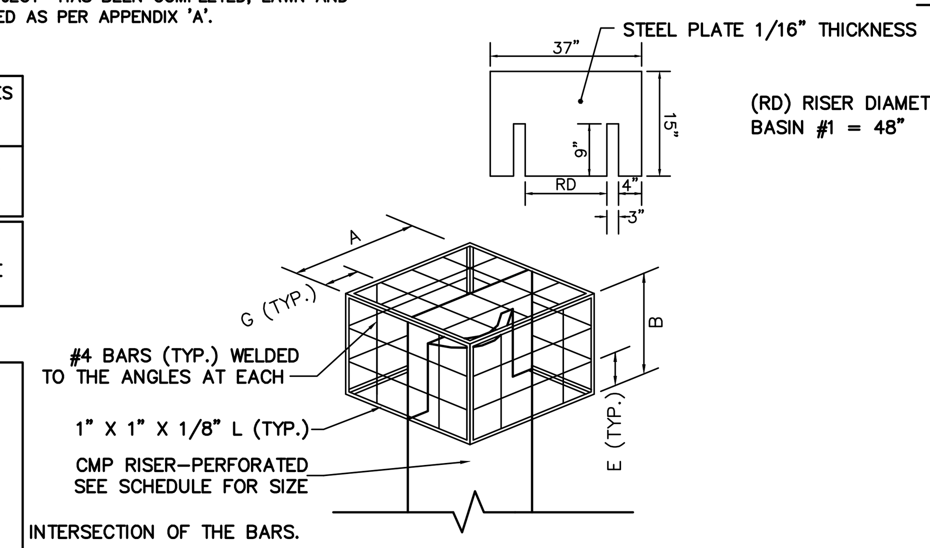

1/29 TRASH RACK AND ANTI-VORTEX DEVICE (SCD #25) NOT TO SCALE

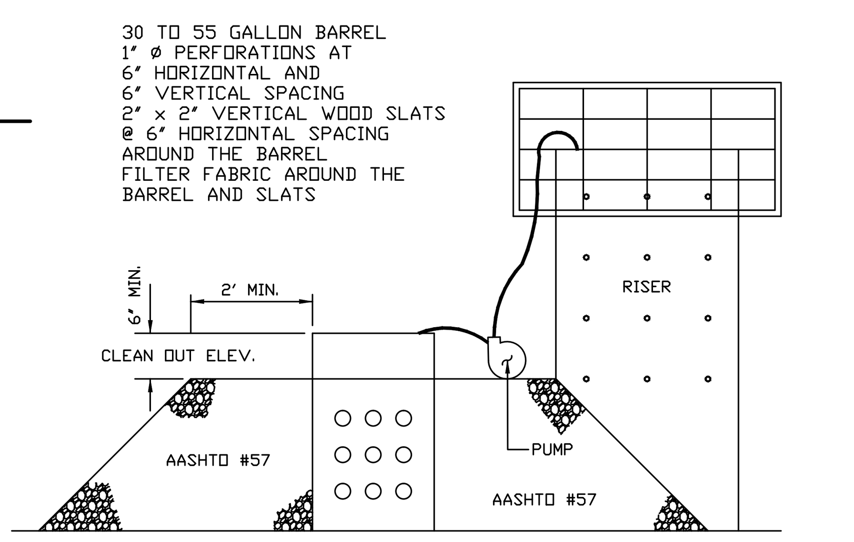

2/29 SEDIMENT BASIN SEDIMENT STORAGE DEWATERING FACILITY (SCD #10) N.T.S.

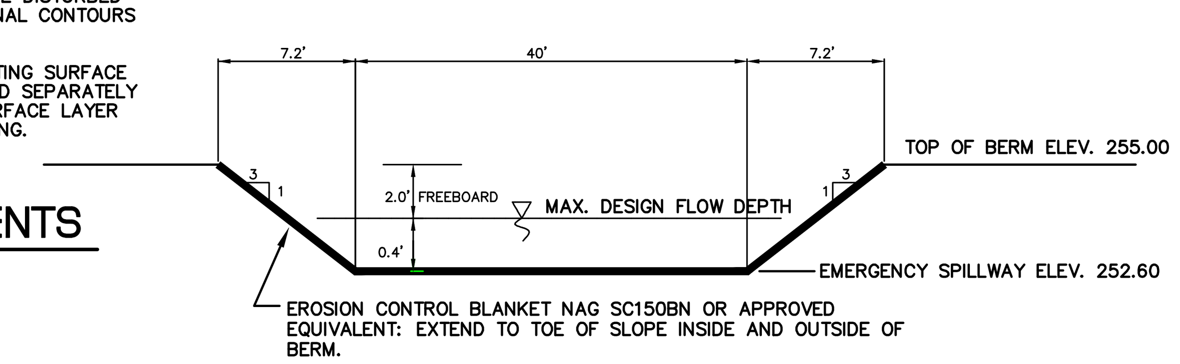

3/29 PHASE 1 SEDIMENT BASIN EMERGENCY SPILLWAY NOT TO SCALE

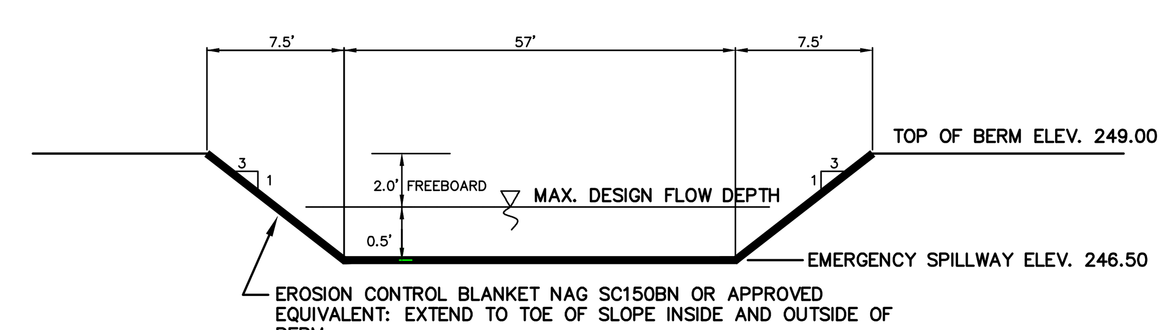

4/29 PHASE 2 AND 3 SEDIMENT BASIN 'A' EMERGENCY SPILLWAY NOT TO SCALE

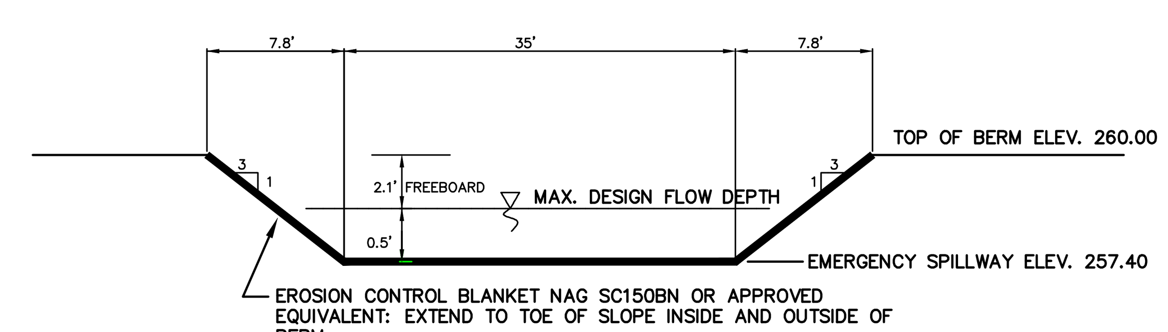

5/29 PHASE 2 SEDIMENT BASIN 'B' EMERGENCY SPILLWAY NOT TO SCALE

SOIL USE LIMITATIONS

USE/PROPERTY	AbA	Bp	CfA	DsA	LaB3	LdB2	MeB	ReA	ReB2
RESIDENTIAL DEVELOPMENT	SEVERE	SEVERE	POOR	SEVERE	SLIGHT	SLIGHT	MODERATE	MODERATE	MODERATE
ROADS FOR SUBDIVISION	MODERATE	SEVERE	MODERATE	SEVERE	MODERATE	SLIGHT	MODERATE	MODERATE	MODERATE
WINTER GRADING	POOR	POOR	POOR	POOR	GOOD	GOOD	FAIR	POOR	POOR
TOPSOIL	FAIR	FAIR	FAIR	FAIR	POOR	GOOD	UNSUITABLE	FAIR	FAIR
POND/ RESERVOIR	FAVORABLE	MOD. PERM.	SLOW PERM.	SLOW. PERM.	MOD. PERM.	MOD. PERM.	VARIES	MOD. PERM.	MOD. PERM.
EMBANKMENT	ERODIBLE	IMPERMEABLE	LACKS STABILITY	IMPERMEABLE	MOD. PERM.	PERMEABLE	VARIES	IMPERMEABLE	IMPERMEABLE
HYDROLOGIC GROUP	C	B/D	C	D	B	C	UNKNOWN	C	C
DEPTH TO BEDROCK	3.5'-5.0'	3'-8'	4'-8'	4'-8'	3'-12'	4'-12'	UNKNOWN	3'-5'	3'-5'
REACTION (pH)	4.5-6.0	5-6.5	5.5-6.5	5.5-6.5	5.5-6.5	5-6.5	UNKNOWN	6.0-7.0	6.0-7.0
DEPTH TO WATER TABLE	0.5'-1.5'	0'-0.5'	0'-1'	0'-0.5'	3'+	5'+	UNKNOWN	1.5'-2.5'	1.5'-2.5'

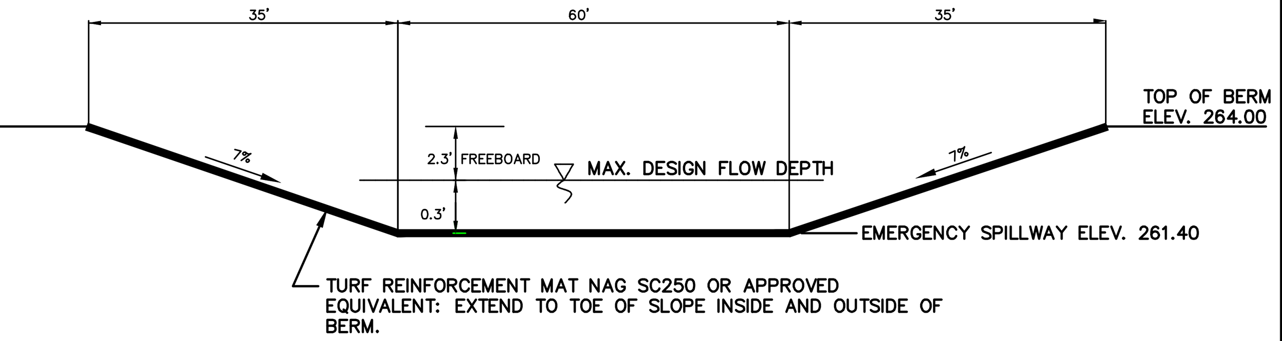

6/29 PHASE 3 AND 4 SEDIMENT BASIN 'B' EMERGENCY SPILLWAY NOT TO SCALE

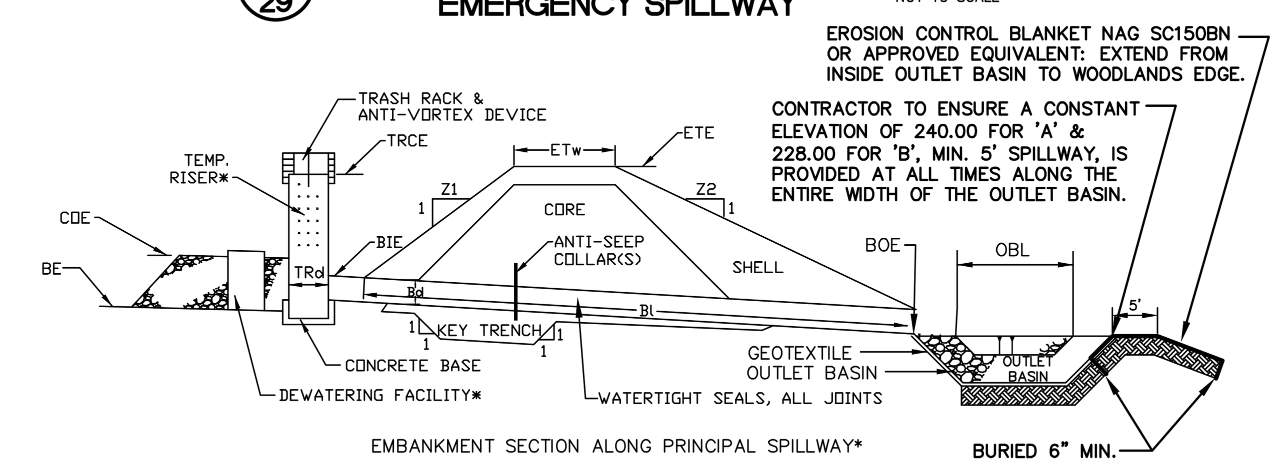

EMBANKMENT SECTION ALONG PRINCIPAL SPILLWAY*

BASIN NO.	Z1 (FT)	Z2 (FT)	TEMPORARY RISER DIA TRd (IN)	TEMPORARY RISER CREST ELEV TRCE (FT)	TEMPORARY RISER MAT'L	BARREL DIA Bd (IN)	BARREL INLET ELEV BIE (FT)	BARREL MAT'L	BARREL LENGTH Bl (FT)	BARREL OUTLET ELEV BOE (FT)	EMBANKMENT TOP ELEV ETE (FT)	EMBANKMENT TOP WIDTH ETw (FT)	CLEAN OUT ELEV COE (FT)	BOTTOM ELEV BE (FT)
PHASE 1	3	3	36	245.00	CMP	24	237.00	RCP	218	225.00	255.00	10	241.30	240.00
PH 2 'A'	3	3	36	246.00	CMP	24	238.50	RCP	65	237.00	249.00	8	243.50	242.50
PH 2 'B'	3	3	36	252.00	CMP	24	244.60	RCP	270	225.00	260.00	10	246.50	245.00
PH 3 'A'	3	3	36	246.00	CMP	24	238.50	RCP	65	237.00	249.00	8	243.50	242.50
PH 3 'B'	3	3	36	257.80	CMP	24	250.40	RCP	334	225.00	264.00	10	252.50	250.40

BASIN NO.	CONCRETE BASE LENGTH CBl (IN)	CONCRETE BASE WIDTH CBw (IN)	CONCRETE BASE THICKNESS CBt (IN)	OUTLET BASIN RIPRAP SIZE (R-_)	OUTLET BASIN DEPTH D (IN)	OUTLET BASIN WIDTH OBW (FT)	OUTLET BASIN LENGTH OBL (FT)
'A'	60	60	24	R-5	36	365	20
'B'	60	60	24	R-5	36	215	20

* Also refer to Sediment Basin Temporary Riser, Emergency Spillway, Energy Dissipater, Trash Rack & Anti-vortex Device, and Sediment Storage Dewatering Facility Details.

A clean out stake shall be placed near the center of each basin. Accumulated sediment shall be removed when it has reached the clean out elevation on the stake.

7/29 SEDIMENT BASINS (SCD #3) NOT TO SCALE

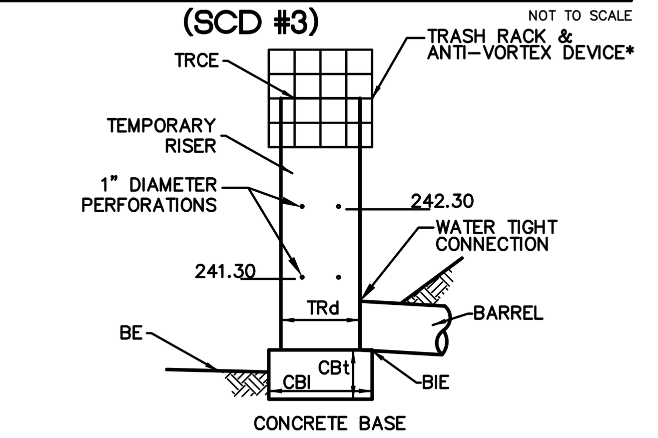

BASIN NO.	TEMPORARY RISER DIA TRd (IN)	TEMPORARY RISER CREST ELEV TRCE (FT)	TEMPORARY RISER MAT'L	PERFORATIONS NO. HOLES PER ROW	PERFORATIONS VERTICAL SPACING OF ROWS (FT)	CONCRETE BASE LENGTH CBl (IN)	CONCRETE BASE WIDTH CBw (IN)	CONCRETE BASE THICK. CBt (IN)	BARREL INLET ELEV BIE (FT)
PHASE 1	36	245.00	CMP	8	1	60	60	24	237.00

* See Trash Rack & Anti-vortex Device Detail

8/29 SEDIMENT BASIN TEMPORARY RISER PHASE 1 N.T.S.

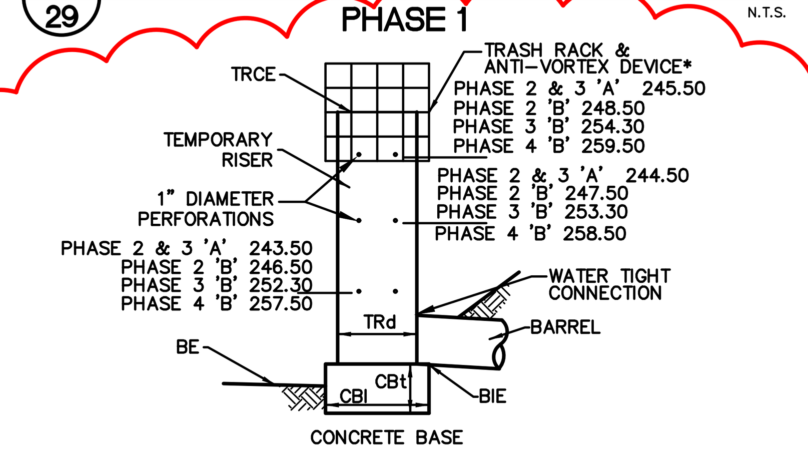

BASIN NO.	TEMPORARY RISER DIA TRd (IN)	TEMPORARY RISER CREST ELEV TRCE (FT)	TEMPORARY RISER MAT'L	PERFORATIONS NO. HOLES PER ROW	PERFORATIONS VERTICAL SPACING OF ROWS (FT)	CONCRETE BASE LENGTH CBl (IN)	CONCRETE BASE WIDTH CBw (IN)	CONCRETE BASE THICK. CBt (IN)	BARREL INLET ELEV BIE (FT)
PH 2 'A'	36	245.90	CMP	15	1	60	60	24	238.90
PH 2 'B'	36	252.00	CMP	8	1	60	60	24	244.60
PH 3 'A'	36	245.90	CMP	15	1	60	60	24	238.90
PH 3 'B'	36	257.80	CMP	8	1	60	60	24	250.40
PH 4 'B'	36	260.90	CMP	3	N/A	60	60	24	255.00

* See Trash Rack & Anti-vortex Device Detail

9/29 SEDIMENT BASIN TEMPORARY RISER PHASES 2, 3 AND 4 N.T.S.

HIBBELN ENGINEERING COMPANY, L.L.C.
CONSULTING ENGINEERS
215·619·9070 PA, NJ, MD & DE
593 Skippack Pike, Suite 300
Blue Bell, Pennsylvania 19422
www.hibbelnengineering.com
IN CONJUNCTION WITH:
LandConcepts
593 Skippack Pike • Suite 300 • Blue Bell, PA 19422

COOK TRACT ATHLETIC FIELDS

PREPARED FOR

WHITPAIN TOWNSHIP

SITE SITUATE IN

WHITPAIN TOWNSHIP
MONTGOMERY COUNTY, PENNSYLVANIA

ALL DOCUMENTS PREPARED BY HIBBELN ENGINEERING COMPANY, L.L.C. ARE INSTRUMENTS OF SERVICE IN RESPECT OF THE PROJECT. THEY ARE NOT INTENDED OR REPRESENTED TO BE SUITABLE FOR REUSE BY OWNER OR OTHERS OR EXTENSIONS OF THE PROJECT OR ON ANY OTHER PROJECT. ANY REUSE WITHOUT WRITTEN VERIFICATION OR ADAPTATION BY HIBBELN ENGINEERING COMPANY, L.L.C. FOR THE SPECIFIC PURPOSE INTENDED WILL BE AT OWNERS SOLE RISK AND WITHOUT LIABILITY OR LEGAL EXPOSURE TO HIBBELN ENGINEERING COMPANY, L.L.C.; AND OWNER SHALL INDEMNIFY AND HOLD HARMLESS HIBBELN ENGINEERING COMPANY, L.L.C. FROM ALL CLAIMS, DAMAGES, LOSSES AND EXPENSES ARISING OUT OF OR RESULTING THEREFROM.

NO.	REVISIONS	DATE
6	PER ADDITION OF SEDIMENT BASIN B PHASE 4 PLAN	JUNE 18, 2012
5	PER MCCD LETTER (2-9-12)	FEBRUARY 10, 2012
4	PER STORM SYTEM 'B'	JANUARY 31, 2012
3	PER MCCD LETTER (1/3/12)	JANUARY 5, 2012
2	PER SANITARY SEWER RELOCATION	DECEMBER 19, 2011
1	100% COMPLETION PLAN	NOVEMBER 22, 2011
	PLAN ORIGINATION DATE	AUGUST 26, 2011

HIBBELN ENGINEERING COMPANY, L.L.C. CONSULTING ENGINEERS

EROSION AND SEDIMENT CONTROL DETAILS PLAN 'A'

COOK TRACT ATHLETIC FIELDS
SITE SITUATE IN
WHITPAIN TOWNSHIP
MONTGOMERY COUNTY, PENNSYLVANIA

PROJECT MANAGER: DSC/AJH	DRAFTED BY: MLW
PROJECT NUMBER: 12460	DRAWING FILE: #12460_SHT29-37
PLAN SCALE: N.T.S.	PLAN SHEET NUMBER 29 OF 38

FILTREXX®

SWPPP Cut Sheet

Last Updated: 7-1-07

Section 1: Erosion and Sediment Control – Construction Activities

1.1 Filtrexx SiltSoxx™

Sediment & Perimeter Control Technology

PURPOSE & DESCRIPTION

Filtrexx SiltSoxx™ are a three-dimensional tubular sediment control and storm water runoff filtration device typically used for **perimeter control** of sediment and other soluble pollutants (such as phosphorus and petroleum hydrocarbons), on and around construction activities.

APPLICATION

Filtrexx SiltSoxx™ are to be installed down slope of any disturbed area requiring erosion and sediment control and filtration of soluble pollutants from runoff. SiltSoxx™ are effective when installed perpendicular to sheet or low concentrated flow. Acceptable applications include:

- Site perimeters
- Above and below disturbed areas subject to sheet runoff, interrill and rill erosion
- Above and below exposed and erodable slopes
- Around area drains or inlets located in a 'sump'
- On compacted soils where trenching of silt fence is difficult or impossible
- Around sensitive trees where trenching of silt fence is not beneficial for tree survival or may unnecessarily disturb established vegetation.
- On frozen ground where trenching of silt fence is impossible.
- On paved surfaces where trenching of silt fence is impossible.

INSTALLATION

1. SiltSoxx™ used for perimeter control of sediment and soluble pollutants in storm runoff shall meet Filtrexx Soxx™ Material Specifications and use Certified Filtrexx FilterMedia™.
2. Contractor is required to be Filtrexx Certified™ as determined by Filtrexx International, LLC (440-926-2607 or visit website at www.filtrexx.com). Certification shall be considered current if appropriate identification is shown during time of bid or at time of application (current listing can be found at www.filtrexx.com). Look for the Filtrexx Certified™ Seal.
3. SiltSoxx™ will be placed at locations indicated on plans as directed by the Engineer.
4. SiltSoxx™ should be installed parallel to the base of the slope or other disturbed area. In extreme conditions (i.e., 2:1 slopes), a second SiltSoxx™ shall be constructed at the top of the slope.
5. Stakes shall be installed through the middle of the SiltSoxx™ on 10 ft (3m) centers, using 2 in (50mm) by 2 in (50mm) by 3 ft (1m) wooden stakes. In the event staking is not possible, i.e., when SiltSoxx™ are used on pavement, heavy concrete blocks shall be used behind the SiltSoxx™ to help stabilize during rainfall/runoff events.
6. Staking depth for sand and silt loam soils shall be 12 in (300mm), and 8 in (200mm) for clay soils.
7. Loose compost may be backfilled along the upslope side of the SiltSoxx™, filling the seam between the soil surface and the device, improving filtration and sediment retention.
8. If the SiltSoxx™ is to be left as a permanent filter or part of the natural landscape, it may be seeded at time of installation for establishment of permanent vegetation. The Engineer will specify seed requirements.
9. Filtrexx SiltSoxx™ are not to be used in perennial, ephemeral, or intermittent streams.

See design drawing schematic for correct Filtrexx SiltSoxx™ installation (Figure 1.1).

INSPECTION and MAINTENANCE

Routine inspection should be conducted within 24 hrs of a runoff event or as designated by the regulating authority. SiltSoxx™ should be regularly inspected to make sure they maintain their shape and are producing adequate hydraulic flow-through. If ponding becomes excessive, additional SiltSoxx™ may be required to reduce effective slope length or sediment removal may be necessary. SiltSoxx™ shall be inspected until area above has been permanently stabilized and construction activity has ceased

1. The Contractor shall maintain the SiltSoxx™ in a functional condition at all times and it shall be routinely inspected.
2. If the SiltSoxx™ has been damaged, it shall be repaired, or replaced if beyond repair.
3. The Contractor shall remove sediment at the base of the upslope side of the SiltSoxx™ when accumulation has reached 1/2 of the effective height of the SiltSoxx™, or as directed by the Engineer. Alternatively, a new SiltSoxx™ can be placed on top of and slightly behind the original one creating more sediment storage capacity without soil disturbance.
4. SiltSoxx™ shall be maintained until disturbed area above the device has been permanently stabilized and construction activity has ceased.
5. The FilterMedia™ will be dispersed on site once disturbed area has been permanently stabilized, construction activity has ceased, or as determined by the Engineer.
6. For long-term sediment and pollution control applications, SiltSoxx™ can be seeded at the time of installation to create a vegetative filtering system for prolonged and increased filtration of sediment and soluble pollutants (contained vegetative filter strip). The appropriate seed mix shall be determined by the Engineer.

Filtrexx® SiltSoxx™ Details

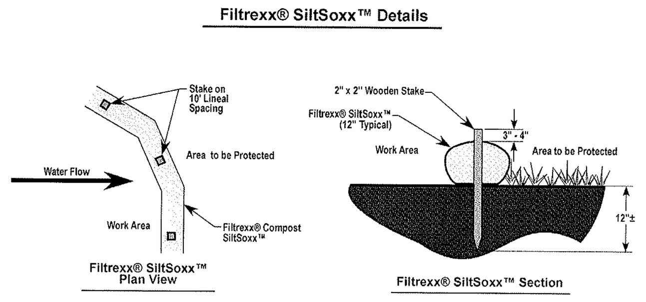

Notes:
1. All material to meet Filtrexx® specifications.
2. SiltSoxx™ compost/soil/rock/seed fill to meet application requirements.
3. SiltSoxx™ depicted is for minimum slopes. Greater slopes may require larger socks per the Engineer.
4. Compost material to be dispersed on site, as determined by Engineer.

Slope Percent	Maximum Slope Length Above SiltSoxx™ in Feet (meters)*				
	8 in (200 mm) SiltSoxx™	12 in (300 mm) SiltSoxx™	18 in (450 mm) SiltSoxx™	24 in (600mm) SiltSoxx™	32 in (800mm) SiltSoxx™
	7 in (175 mm)**	10 in (250 mm) **	15 in (375 mm) **	20 in (500 mm) **	26 in (650 mm) **
2 (or less)	600 (180)	750 (225)	1000 (300)	1300 (400)	1650 (500)
5	400 (120)	500 (150)	550 (165)	650 (200)	750 (225)
10	200 (60)	250 (75)	300 (90)	400 (120)	500 (150)
15	140 (40)	170 (50)	200 (60)	325 (100)	450 (140)
20	100 (30)	125 (38)	140 (42)	260 (80)	400 (120)
25	80 (24)	100 (30)	110 (33)	200 (60)	275 (85)
30	60 (18)	75 (23)	90 (27)	130 (40)	200 (60)
35	60 (18)	75 (23)	80 (24)	115 (35)	150 (45)
40	60 (18)	75 (23)	80 (24)	100 (30)	125 (38)
45	40 (12)	50 (15)	60 (18)	80 (24)	100 (30)
50	40 (12)	50 (15)	55 (17)	65 (20)	75 (23)

*Based on a failure point of 36 in (0.9 m) super silt fence (wire reinforced) at 1000 ft (303 m) of slope, watershed width equivalent to receiving length of sediment control device, 1 in/ 24 hr (25 mm/24 hr) rain event. **Effective height of Silt Soxx™ after installation and with constant head from runoff as determined by Ohio State University.

2/30 SILT SOCK DETAIL

NOT TO SCALE

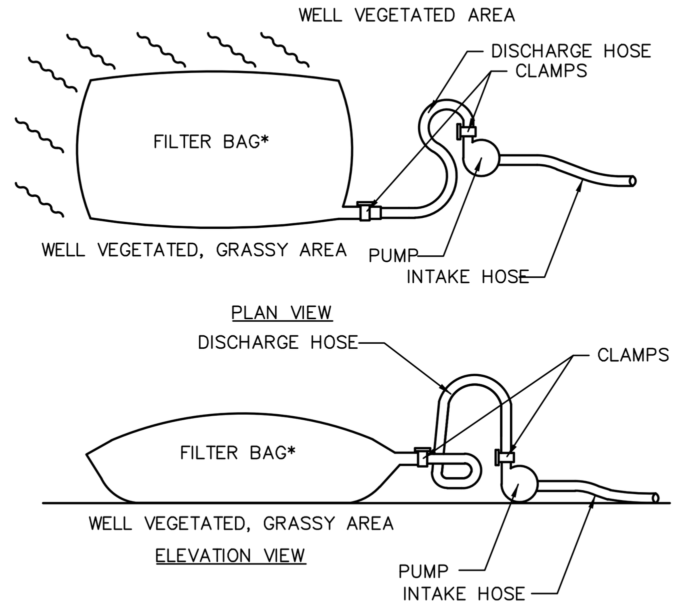

NON-WOVEN GEOTEXTILE FILTER BAG WHICH RETAINS ALL SEDIMENT PARTICLES LARGER THAN 150 MICRONS.

PLACE FILTER BAGS ON STABLE OR WELL VEGETATED AREAS WHICH ARE FLATTER THAN 5% AND WHICH WILL NOT ERODE WHEN SUBJECTED TO BAG DISCHARGES.

CLAMP PUMP DISCHARGE HOSES SECURELY INTO FILTER BAGS.

LIMIT PUMPING RATE TO 1/2 THE MANUFACTURE'S MAXIMUM PUMPING RATE.

WHEN SEDIMENTS FILL 1/2 THE VOLUME OF A FILTER BAG, IMMEDIATELY REMOVE THAT BAG FROM SERVICE. PROPERLY DISPOSE OF THE SPENT BAGS WITH THEIR SEDIMENTS.

6/30 PUMPED WATER FILTRATION BAG

NOT TO SCALE

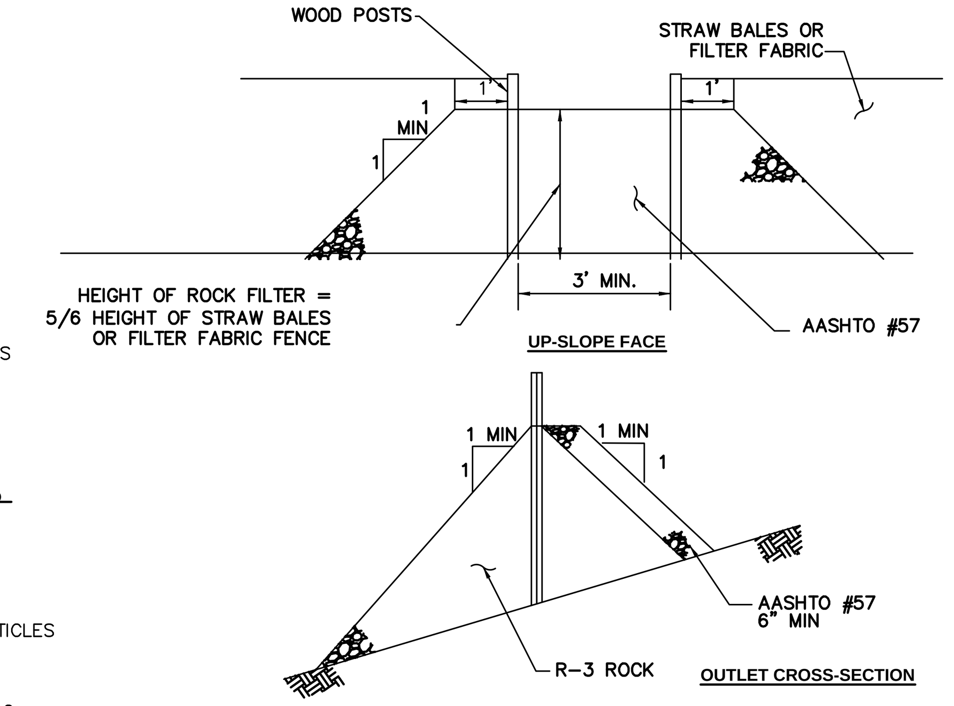

Sediment must be removed when accumulations reach 1/3 the height of the outlet.

9/30 ROCK FILTER OUTLET

N.T.S.

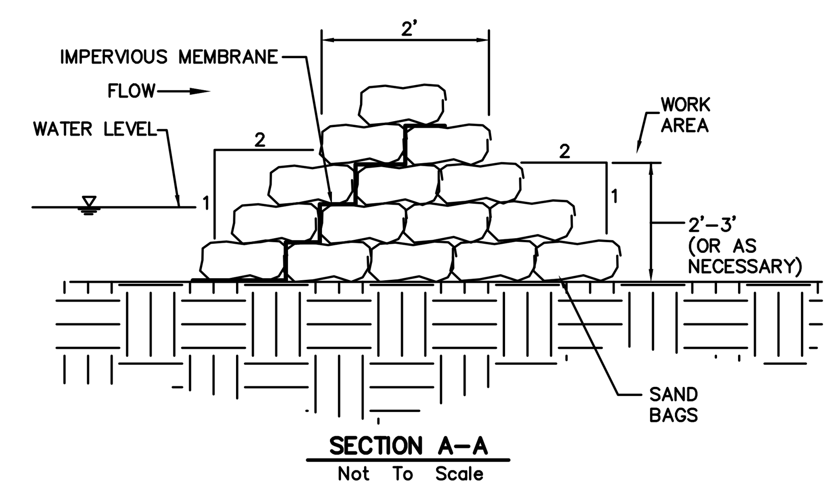

1. ALL WORK SHALL TAKE PLACE DURING PERIODS OF LOW CHANNEL FLOW.

2. CONSTRUCTION OF CHANNEL DIVERSION IS FOR THE PURPOSE OF CONSTRUCTING THE NEW CHANNEL. THE CHANNEL CONSTRUCTION SHALL FOLLOW A STEP PROCEDURE AS DETAILED HEREON. ALL DISTURBED AREAS SHALL BE STABILIZED AND WORK AREA CLEANED OF DEBRIS PRIOR TO RELOCATION/REMOVAL OF CHANNEL DIVERSION SANDBAGS.

3. ALL WORK SHALL FOLLOW THE GUIDELINES ESTABLISHED IN THE DEPARTMENT OF ENVIRONMENTAL RESOURCES CHAPTER 102 REGULATIONS.

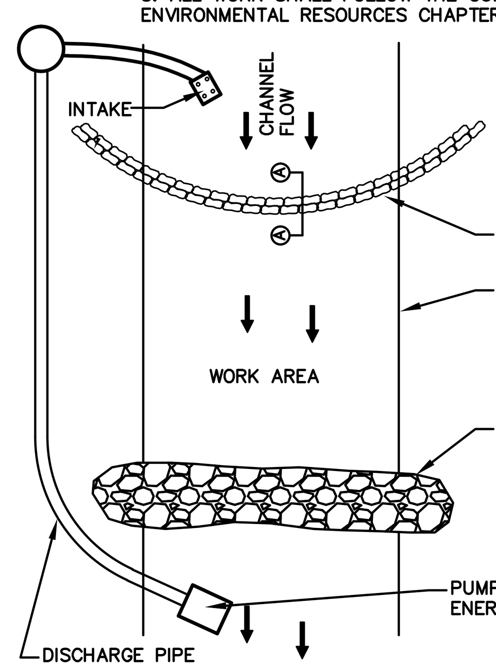

CONSTRUCTION SEQUENCE:

1. PLACE SANDBAGS AND IMPERMEABLE MEMBRANE.
2. SET UP PUMP, DISCHARGE PIPE AND PUMP DISCHARGE ENERGY DISSIPATER.
3. PERFORM CONSTRUCTION WITHIN DESIGNATED PHASE.
4. STABILIZE NEWLY GRADED CHANNEL.
5. RELOCATE SANDBAGS AND PUMP TO NEXT PHASE OF CONSTRUCTION.

3/30 TEMPORARY COFFERDAM AND PUMP BYPASS AROUND IN-CHANNEL WORK

N.T.S.

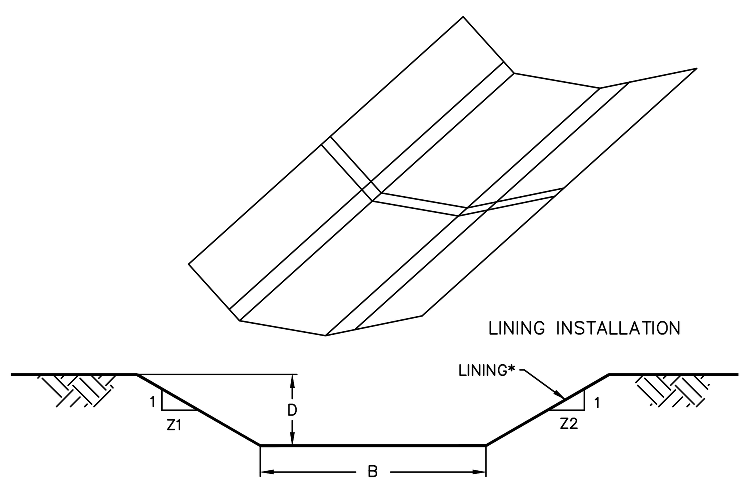

CHANNEL NO.	STATION	BOTTOM WIDTH B (FT)	DEPTH D (FT)	Z2 (FT)	Z2 (FT)	LINING*
TEMPORARY SWALE 1	SEE PLAN	2.5	1.5	3	3	NAG SC150BN OR APPROVED EQUAL
PERMANENT SWALE 1	SEE PLAN	2.5	1.5	3	3	KENTUCKY BLUEGRASS
TEMPORARY SWALE 2	SEE PLAN	2.5	1.5	3	3	NAG SC150BN OR APPROVED EQUAL
PERMANENT SWALE 2	SEE PLAN	2.5	1.5	3	3	KENTUCKY BLUEGRASS
TEMPORARY SWALE 3	SEE PLAN	2.5	1.5	3	3	NAG SC150BN OR APPROVED EQUAL
PERMANENT SWALE 3	SEE PLAN	2.5	1.5	3	3	KENTUCKY BLUEGRASS
TEMPORARY SWALE 4	SEE PLAN	2.5	1.5	3	3	NAG SC150BN OR APPROVED EQUAL
PERMANENT SWALE 4	SEE PLAN	2.5	1.5	3	3	KENTUCKY BLUEGRASS
TEMPORARY SWALE 5	SEE PLAN	4.0	1.0	3	3	NAG SC150BN OR APPROVED EQUAL
TEMPORARY SWALE 6	SEE PLAN	6.5	1.5	3	3	NAG SC150BN OR APPROVED EQUAL
PERMANENT SWALE 6	SEE PLAN	6.5	1.5	3	3	KENTUCKY BLUEGRASS

* See Manufacturer's Lining Installation Detail for Staple Patterns, and Vegetation Stabilization Specifications for Soil Amendments, Seed Mixtures, and Mulching information.

4/30 VEGETATED CHANNELS

NOT TO SCALE

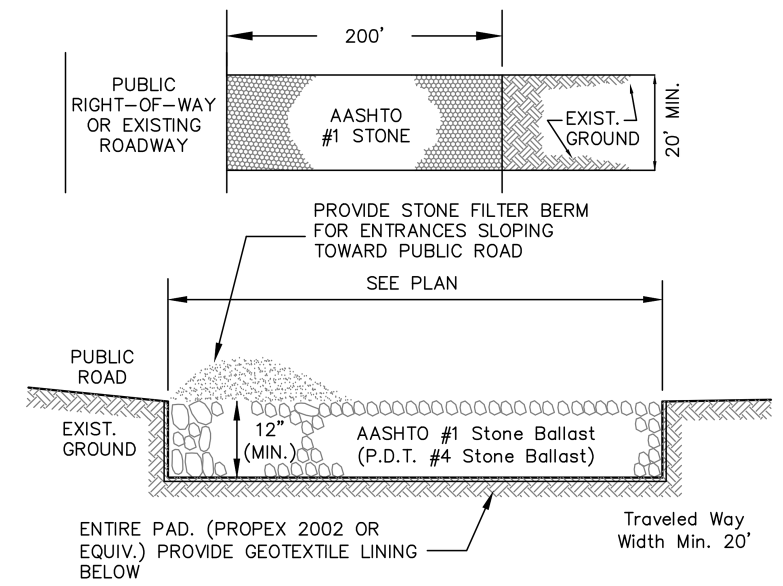

STONE SIZE – AASHTO NUMBER 1 AS SPECIFIED IN SECTION 703.2 OF PENNDOT SPECIFICATION 408.

LENGTH – SEE PLAN

THICKNESS – NOT LESS THAN 12"

WIDTH – FULL WIDTH OF ROADWAY, 20' MIN.

WASHING – WHEN NECESSARY, WHEELS SHALL BE CLEANED TO REMOVE SEDIMENT PRIOR TO ENTRANCE ONTO PUBLIC RIGHT-OF-WAY. WHEN WASHING IS REQUIRED, IT SHALL BE DONE ON AN AREA STABILIZED WITH CRUSHED STONE WHICH DRAINS INTO AN APPROVED SEDIMENT TRAP OR SEDIMENT BASIN. ALL SEDIMENT SHALL BE PREVENTED FROM ENTERING ANY STORM DRAIN, DITCH, OR WATERCOURSE THROUGH USE OF SAND BAGS, GRAVEL, BOARDS, OR OTHER APPROVED METHODS.

MAINTENANCE – ROCK CONSTRUCTION ENTRANCE THICKNESS SHALL BE CONSTANTLY MAINTAINED TO THE SPECIFIED DIMENSIONS BY ADDING ROCK. A STOCKPILE SHALL BE MAINTAINED ON SITE FOR THIS PURPOSE. ALL SEDIMENT DEPOSITED ON PAVED ROADWAYS SHALL BE REMOVED IMMEDIATELY AND RETURNED TO THE CONSTRUCTION SITE.

7/30 TEMPORARY ROCK CONSTRUCTION ENTRANCE

NOT TO SCALE

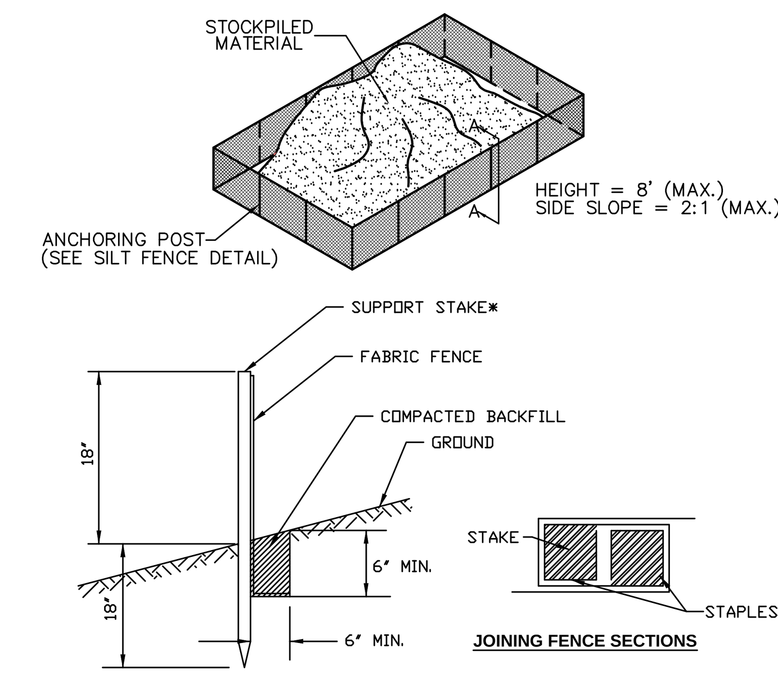

* Stakes spaced @ 8' maximum. Use 2" x 2" wood or equivalent steel stakes.

Filter Fabric Fence must be placed at level existing grade. Both ends of the barrier must be extended at least 8 feet up slope at 45 degrees to the main barrier alignment.

Sediment must be removed when accumulations reach 1/2 the above ground height of the fence.

Any section of Filter Fabric Fence which has been undermined or topped must be immediately replaced with a Rock Filter Outlet. See Standard Construction Detail #18.

INSTALL SILT FENCE DOWNSLOPE OF TOPSOIL STOCKPILE

10/30 STOCKPILE CONTROL

NOT TO SCALE

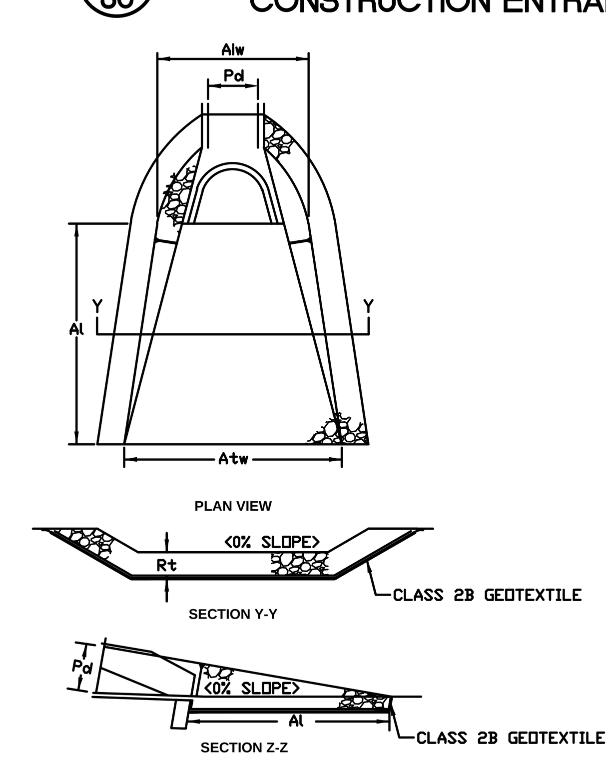

OUTLET NO.	PIPE DIA Pd (IN)	RIPRAP SIZE (R-_)	RIPRAP THICK. Rt (IN)	APRON LENGTH Al (FT)	APRON INITIAL WIDTH Aiw (FT)	APRON TERMINAL WIDTH Atw (FT)
B-1	24	R-7	45	9	5	14
C-1	18	R-3	9	9	5	14
D-1	18	R-3	9	9	5	14
E-1	30	R-4	45	14	8	22
F-1	30	R-4	18	16	8	24
G-1	18	R-4	18	12	5	17
I-1	18	R-4	18	12	5	17
J-1	18	R-7	45	16	5	20
K-1	TRIPLE 30	R-7	45	38	15	50
L-1	18	R-4	18	14	5	19

8/30 RIP-RAP APRON DETAIL (SCD #33)

NOT TO SCALE

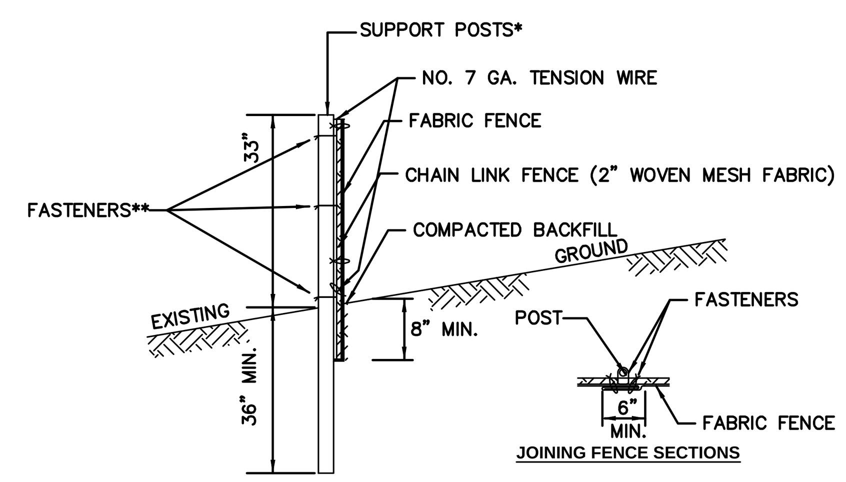

* POSTS SPACED @ 10' MAX. USE 2 1/2" DIA. GALVANIZED OR ALUMINUM POSTS.

** CHAIN LINK TO POST FASTENERS SPACED @ 14" MAX. USE NO. 6 GA. ALUMINUM WIRE OR NO. 9 GALVANIZED STEEL PRE-FORMED CLIPS. CHAIN LINK TO TENSION WIRE FASTENERS SPACED @ 60" MAX. USE NO. 10 GA. GALVANIZED STEEL WIRE. FABRIC TO CHAIN FASTENERS SPACED @ 24" MAX. C TO C.

NO. 7 GA. TENSION WIRE INSTALLED HORIZONTALLY AT TOP AND BOTTOM OF CHAIN-LINK FENCE.

FILTER FABRIC FENCE MUST BE PLACED AT EXISTING LEVEL GRADE. BOTH ENDS OF THE BARRIER MUST BE EXTENDED AT LEAST 8 FEET UPSLOPE AT 45 DEGREES TO THE MAIN BARRIER ALIGNMENT.

SEDIMENT MUST BE REMOVED WHEN ACCUMULATIONS REACH 1/2 THE ABOVE GROUND HEIGHT OF THE FENCE.

11/30 SUPER SILT FABRIC FENCE SCD #22

N.T.S.

Flexterra® FGM™

PROFILE Products LLC
750 Lake Cook Rd. • Suite 440
Buffalo Grove, IL 60089 • 800-366-1180
www.profileproducts.com

GENERAL

1.01 SUMMARY

(Section 32 92 13 – Hydromulching)

A. This section specifies a hydraulically applied Flexible Growth Medium™ (FGM™) composed of long strand, Thermally Refined® wood fibers, crimped, interlocking man-made fibers and performance-enhancing additives. The FGM requires no curing period and upon application forms an intimate bond with the soil surface to create a continuous, porous, absorbent and flexible erosion resistant blanket that allows for rapid germination and accelerated plant growth.

B. Related Sections: Other Specification Sections, which directly relate to the work of this Section include, but are not limited to the following:

1. Section 01 57 00 - Temporary Erosion and Sediment Control

2. Section 31 20 00 - Earthwork; Establishment of Subgrade

3. Section 31 25 00 - Erosion and Sediment Control

4. Section 32 92 00 - Lawns and Gardens

1.02 SUBMITTALS

A. Product Data: Submit manufacturer's product data and installation instructions. Include required substrate preparation, list of materials and application rate.

B. Certifications: Manufacturer shall submit a letter of certification that the product meets or exceeds all physical property, endurance, performance and packaging requirements.

1.03 DELIVERY, STORAGE AND HANDLING

A. Deliver materials and products in UV and weather-resistant factory labeled packages. Store and handle in strict compliance with manufacturer's instructions and recommendations. Protect from damage, from weather, excessive temperatures and construction operations.

PRODUCTS

2.01 ACCEPTABLE MANUFACTURER

A. PROFILE Products LLC
750 Lake Cook Road – Suite 440
Buffalo Grove, IL 60089
800-366-1180 (Fax 847-215-0577)
www.profileproducts.com

2.02 MATERIALS

A. Flexible Growth Medium shall be Flexterra® FGM™ and conform to the following property values when uniformly applied at a rate of 3500 pounds per acre (3900 kilograms/hectare) under laboratory conditions.

	TEST METHOD	ENGLISH	SI
PHYSICAL			
Mass Per Unit Area	ASTM D6566[1]	11.5 oz/yd²	390 g/m²
Thickness	ASTM D6525[1]	0.19 in	4.8 mm
% Ground Cover	ASTM D6567[1]	99%	99%
Water Holding Capacity	ASTM D7367	1500%	1500%
Flexural Rigidity (wet)	ASTM D6575	0.138 oz-in	10,000 mg-cm
Cure Time	Observed	< 2 hr	< 2 hr
Color (fugitive dye)	Observed	Green	Green
ENDURANCE			
Functional Longevity[2]	Observed	≤ 18 months	≤ 18 months
PERFORMANCE			
Cover Factor[3] (6 in/hr event)	ASTM D7101[1]	0.0066	0.0066
% Effectiveness[4]	ASTM D7101[1]	≥ 99%	≥ 99%
Cover Factor[3]	Large Scale[5]	≤ 0.01	≤ 0.01
% Effectiveness[4]	Large Scale[5]	≥ 99.0%	≥ 99.0%
Shear Stress	ASTM D7207[1]	1 lb/ft²	48 Pa
Vegetation Establishment	ASTM D7322[1]	800%	800%

1. ASTM test methods developed for Rolled Erosion Control Products and have been modified to accommodate hydraulically applied erosion control products.
2. Functional longevity is an estimate of product functionality and is dependent upon moisture, light, microbial and other environmental conditions.
3. Cover Factor is calculated as soil loss ratio of treated surface versus an untreated control surface.
4. % Effectiveness = One minus Cover Factor multiplied by 100%.
5. Large scale testing conducted at Utah Water Research Laboratory, San Diego State University/Soil Research Laboratory, Texas Transportation Institute and TRI/Environmental, Inc. For specific testing information please contact a Profile technical service representative at 866-325-6262.

EXECUTION

3.01 SUBSTRATE AND SEEDBED PREPARATION

A. Examine substrates and conditions where materials will be applied. Apply product to geotechnically stable slopes that have been designed and constructed to divert runoff away from the face of the slope. Do not proceed with installation until satisfactory conditions are established.

B. Depending upon project sequencing and intended application, prepare seedbed in compliance with Section 1.01 B.

3.02 INSTALLATION

A. Strictly comply with Manufacturer's installation instructions and recommendations. Use approved hydro-spraying machines with fan-type nozzle (50-degree tip) whenever possible to achieve best soil coverage. Apply FGM from opposing directions to assure 100% soil surface coverage. Slope interruption devices or water diversion techniques are recommended when slope lengths exceed 75 ft (23 m).

B. Erosion Control and Revegetation: For maximum performance, apply FGM in a two-step process:

Step One: Apply fertilizer, other soil amendments and 50% of seed with a small amount of FGM for visual metering.

Step Two: Mix balance of seed and apply FGM at a rate of 50 lb per 125 gallons (23 kg/475 liters) of water over freshly seeded surfaces. Confirm loading rates with equipment manufacturer. Do not leave seeded surfaces unprotected, especially if precipitation is imminent.

Depending upon site conditions FGM may be applied in a one-step process where all components may be mixed together in single tank loads. Consult with Manufacturer for further details.

C. Mixing: A mechanically agitated hydraulic-application machine is recommended:

i. Fill tank to middle of agitator shaft or tank about 1/3 full of water. Turn on pump to wet or purge lines. Begin agitating. Keep adding water slowly while adding the FGM at a steady rate.

ii. Consult application and loading charts to determine number of bags to be added. Mix at a rate of 50 lb of FGM per 125 gallons (23 kg/475 liters). Contact Equipment manufacturer to confirm optimum mixing rates.

iii. All FGM should be loaded when the tank is approximately 3/4 full.

iv. Fertilizer should be added once the tank is nearly full.

v. Before applying, mix the slurry for at least 10 minutes after adding the last amount of FGM. This is very important to fully activate the bonding additives and to attain proper viscosity.

vi. Turn off recirculation valve to minimize potential for air entrainment within the slurry.

3.03 CLEANING AND PROTECTION

A. Clean spills promptly. Advise owner of methods for protection of treated areas. Do not allow treated areas to be trafficked or subjected to grazing.

An electronic text file of this CSI formatted specification can be obtained by contacting a technical service representative at 866-325-6262.

© 2008 PROFILE Products LLC. All Rights Reserved.
A copyright license to reproduce this specification is hereby granted to non-manufacturing landscape architects, specification writers and designers.

F-15 3/08

1/30 FLEXIBLE GROWTH MEDIUM

NOT TO SCALE

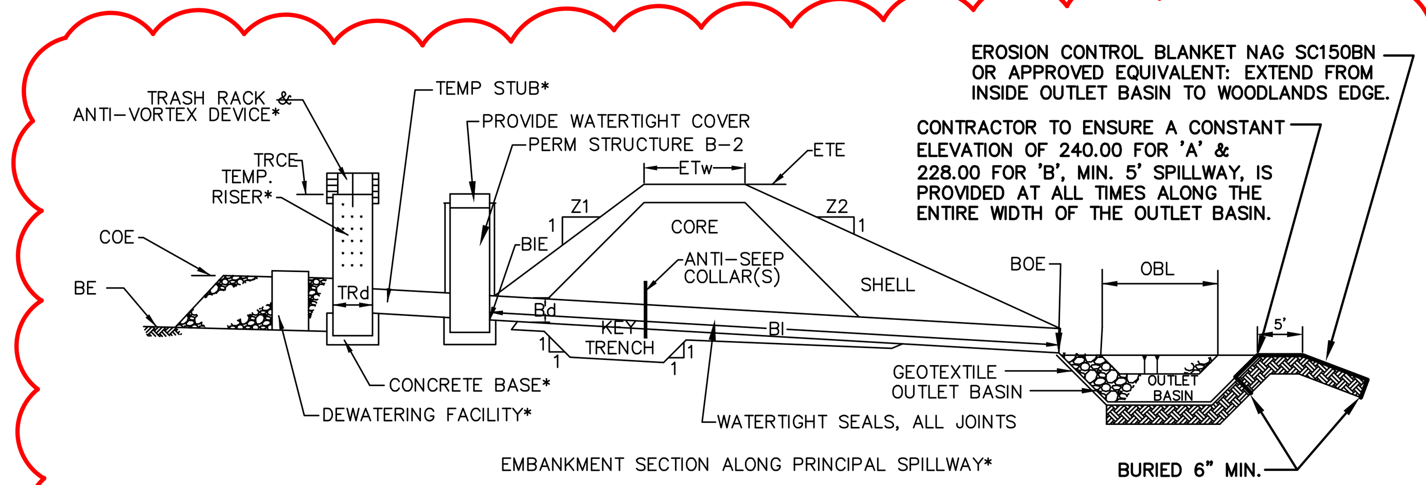

EROSION CONTROL BLANKET NAG SC150BN OR APPROVED EQUIVALENT: EXTEND FROM INSIDE OUTLET BASIN TO WOODLANDS EDGE.

CONTRACTOR TO ENSURE A CONSTANT ELEVATION OF 240.00 FOR 'A' & 228.00 FOR 'B', MIN. 5' SPILLWAY, IS PROVIDED AT ALL TIMES ALONG THE ENTIRE WIDTH OF THE OUTLET BASIN.

EMBANKMENT SECTION ALONG PRINCIPAL SPILLWAY*

BASIN NO.	Z1 (FT)	Z2 (FT)	TEMPORARY RISER DIA TRd (IN)	TEMPORARY RISER CREST ELEV TRCE (FT)	TEMPORARY RISER MAT'L	BARREL DIA Bd (IN)	BARREL INLET ELEV BIE (FT)	BARREL MAT'L	BARREL LENGTH BI (FT)	BARREL OUTLET ELEV BOE (FT)	EMBANKMENT TOP ELEV ETE (FT)	EMBANKMENT TOP WIDTH ETw (FT)	CLEAN OUT ELEV COE (FT)	BOTTOM ELEV BE (FT)
PH. 4 'B'	3	3	36"	260.90	CMP	24	237.00	RCP	97	230.00	264.00	10	257.08	255.00

* See Sediment Basin Temporary Riser & Permanent Structure, Emergency Spillway, Trash Rack & Anti-vortex Device, Energy Dissipater, and Sediment Storage Dewatering Facility Details.

A Clean Out Stake shall be placed near the center of each basin. Accumulated sediment shall be removed when it has reached the clean out level marked on the stake.

3A/30 PHASE 4 SEDIMENT BASIN 'B'

N.T.S.

HIBBELN ENGINEERING COMPANY, L.L.C.
CONSULTING ENGINEERS
215·619·9070 PA, NJ, MD & DE
593 Skippack Pike, Suite 300
Blue Bell, Pennsylvania 19422
www.hibbelnengineering.com
IN CONJUNCTION WITH:
LandConcepts
593 Skippack Pike • Suite 300 • Blue Bell, PA 19422

COOK TRACT ATHLETIC FIELDS

PREPARED FOR

WHITPAIN TOWNSHIP

SITE SITUATE IN

WHITPAIN TOWNSHIP
MONTGOMERY COUNTY, PENNSYLVANIA

ALL DOCUMENTS PREPARED BY HIBBELN ENGINEERING COMPANY, L.L.C. ARE INSTRUMENTS OF SERVICE IN RESPECT OF THE PROJECT. THEY ARE NOT INTENDED OR REPRESENTED TO BE SUITABLE FOR REUSE BY OWNER OR OTHERS OR EXTENSIONS OF THE PROJECT OR ON ANY OTHER PROJECT. ANY REUSE WITHOUT WRITTEN VERIFICATION OR ADAPTATION BY HIBBELN ENGINEERING COMPANY, L.L.C. FOR THE SPECIFIC PURPOSE INTENDED WILL BE AT OWNERS SOLE RISK AND WITHOUT LIABILITY OR LEGAL EXPOSURE TO HIBBELN ENGINEERING COMPANY, L.L.C.; AND OWNER SHALL INDEMNIFY AND HOLD HARMLESS HIBBELN ENGINEERING COMPANY, L.L.C. FROM ALL CLAIMS, DAMAGES, LOSSES AND EXPENSES ARISING OUT OF OR RESULTING THEREFROM.

NO.	REVISIONS	
6	PER ADDITION OF SEDIMENT BASIN B PHASE 4 PLAN	JUNE 18, 2012
5	PER MCCD LETTER (2-9-12)	FEBRUARY 10, 2012
4	PER STORM SYTEM 'B'	JANUARY 31, 2012
3	PER MCCD LETTER (1/3/12)	JANUARY 5, 2012
2	PER SANITARY SEWER RELOCATION	DECEMBER 19, 2011
1	100% COMPLETION PLAN	NOVEMBER 22, 2011
	PLAN ORIGINATION DATE	AUGUST 26, 2011

HIBBELN ENGINEERING COMPANY, L.L.C.
CONSULTING ENGINEERS

EROSION AND SEDIMENT CONTROL DETAILS PLAN 'B'

COOK TRACT
ATHLETIC FIELDS
SITE SITUATE IN
WHITPAIN TOWNSHIP
MONTGOMERY COUNTY, PENNSYLVANIA

PROJECT MANAGER:	DRAFTED BY:
DSC/AJH	MLW
PROJECT NUMBER: 12460	DRAWING FILE: #12460_SHT29-37
PLAN SCALE: N.T.S.	PLAN SHEET NUMBER 30 OF 38

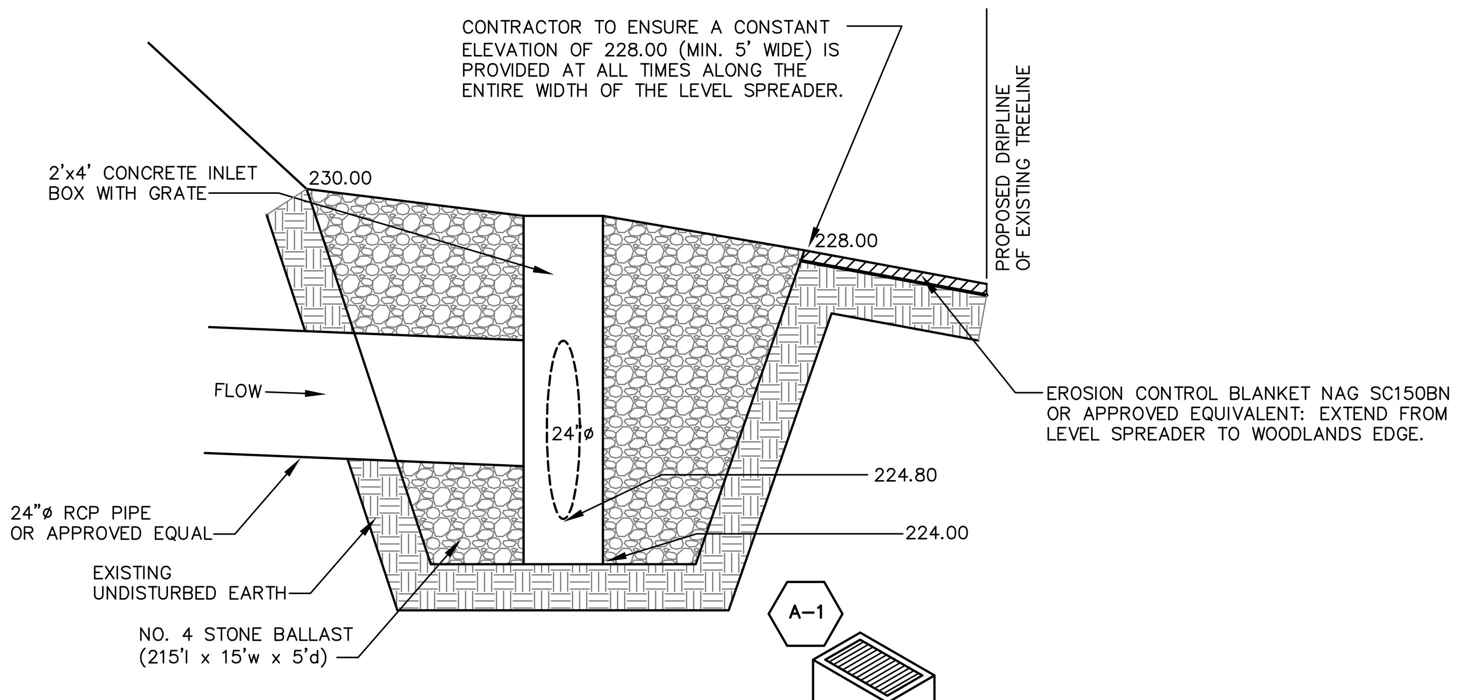

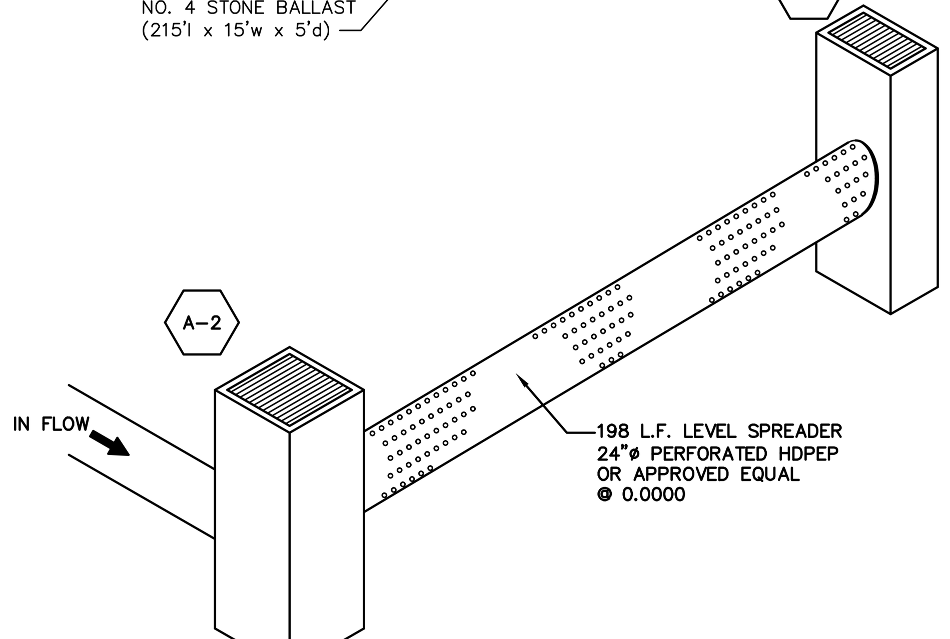

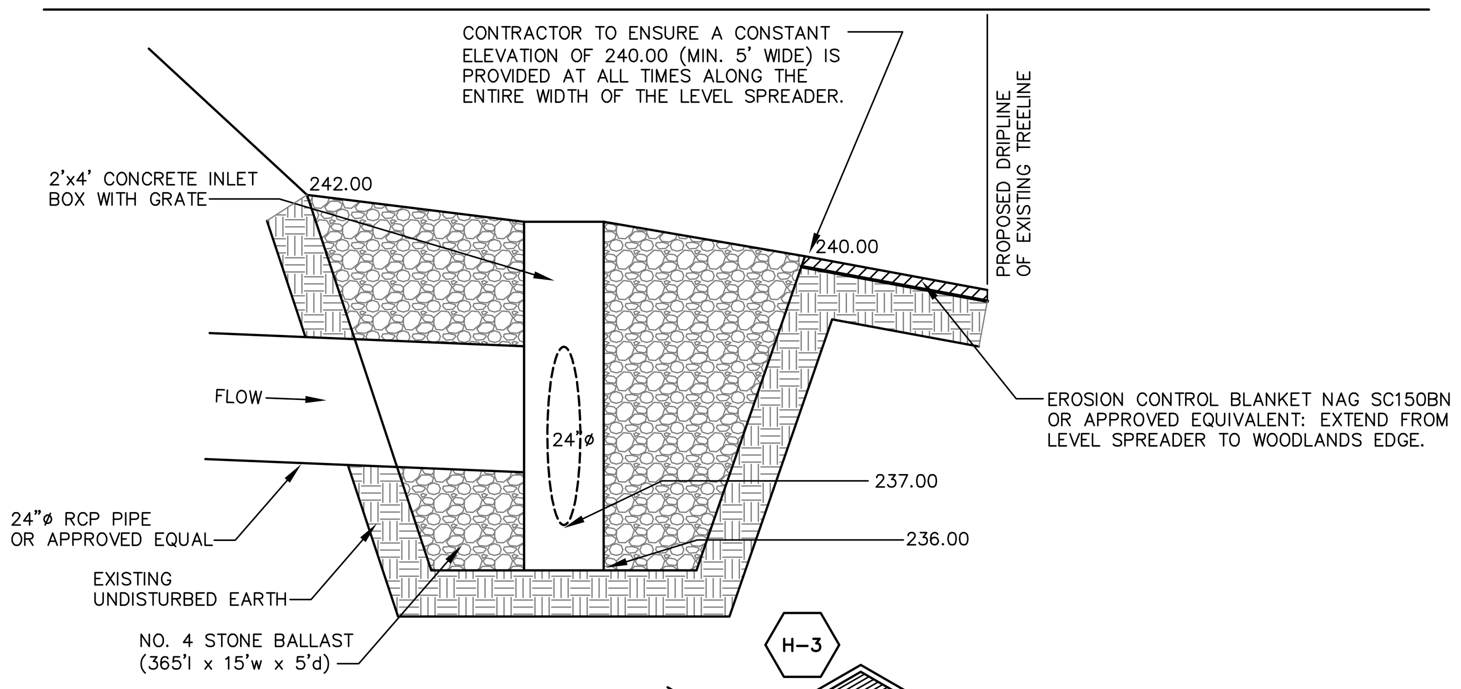

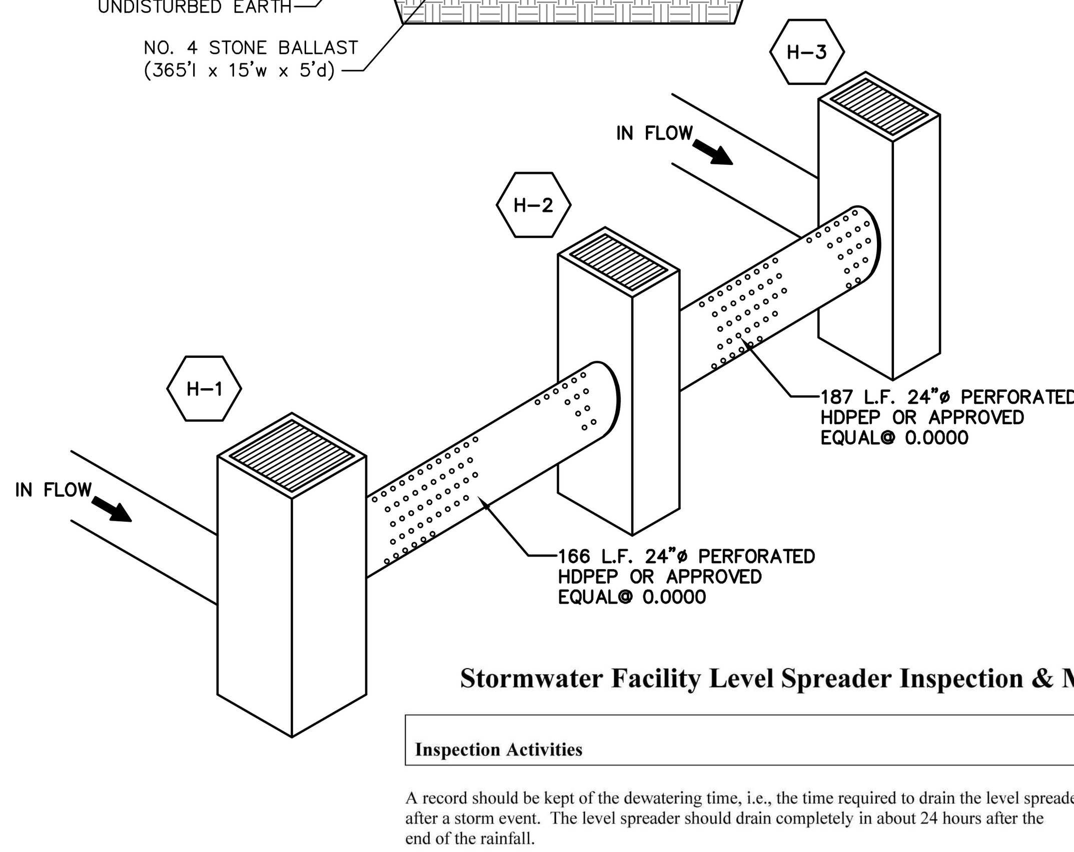

Stormwater Facility Level Spreader Inspection & Maintenance Guide

Inspection Activities	Suggested Schedule
A record should be kept of the dewatering time, i.e., the time required to drain the level spreader after a storm event. The level spreader should drain completely in about 24 hours after the end of the rainfall.	After Rain Events
Check that area draining to the level spreader and its inlets are clear of debris. Check the area draining to the level spreader for evidence of erosion.	Monthly
Inspect drainage structures for sediment build-up and structural damage.	Semi-annual (August & February)

Maintenance Activities	Suggested Schedule
Remove sediment, leaves, sticks and trash from level spreader, as well as from drainage structures. Remove/cut vegetation as necessary. Remove clippings.	Semi-annual (August & February)
Remove trees that start to grow in the level spreader or within 5 feet of the level spreader.	Semi-annual (August & February)
Replace rock and top surface of level spreader (when clogged). Stabilize (i.e., vegetate) areas of erosion in all the areas draining to the level spreader.	As needed
Perform total rehabilitation of the level spreader to maintain design integrity. Excavate trench walls to expose clean soil.	Upon failure

1/31 **LEVEL SPREADER DETAILS**

NOT TO SCALE

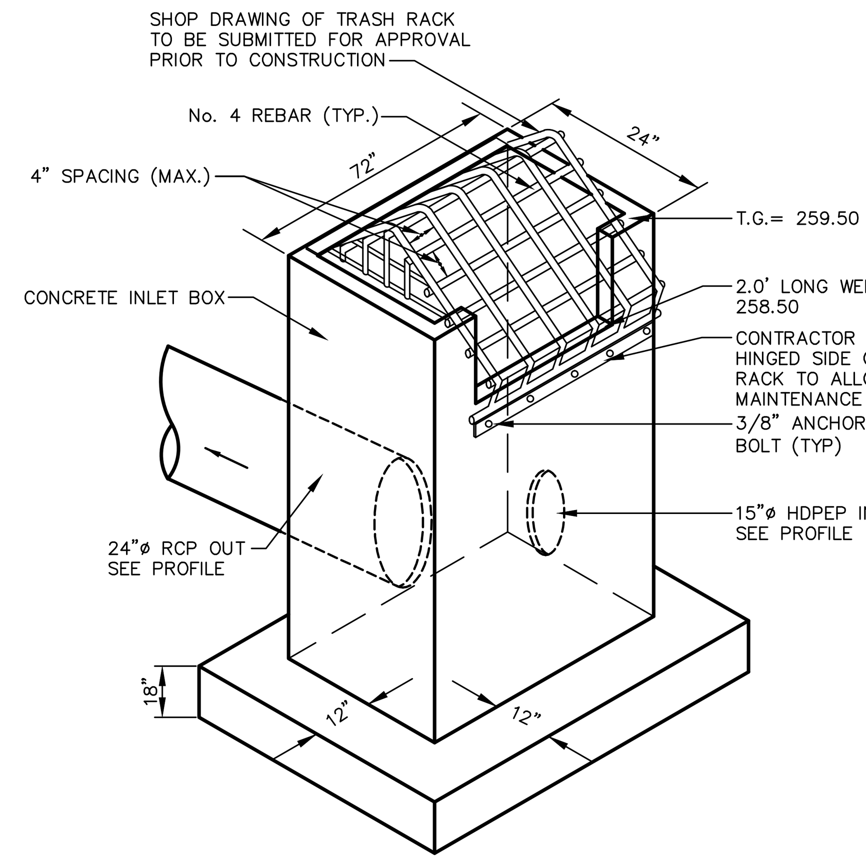

NOTE: AFTER RACK IS CONSTRUCTED (WELDED) THE ASSEMBLY SHALL BE PAINTED WITH A RUST PROOF COATING, 3 COATS.

2/31 **INLET BOX B-1 WITH WEIR DETAIL**

NOT TO SCALE

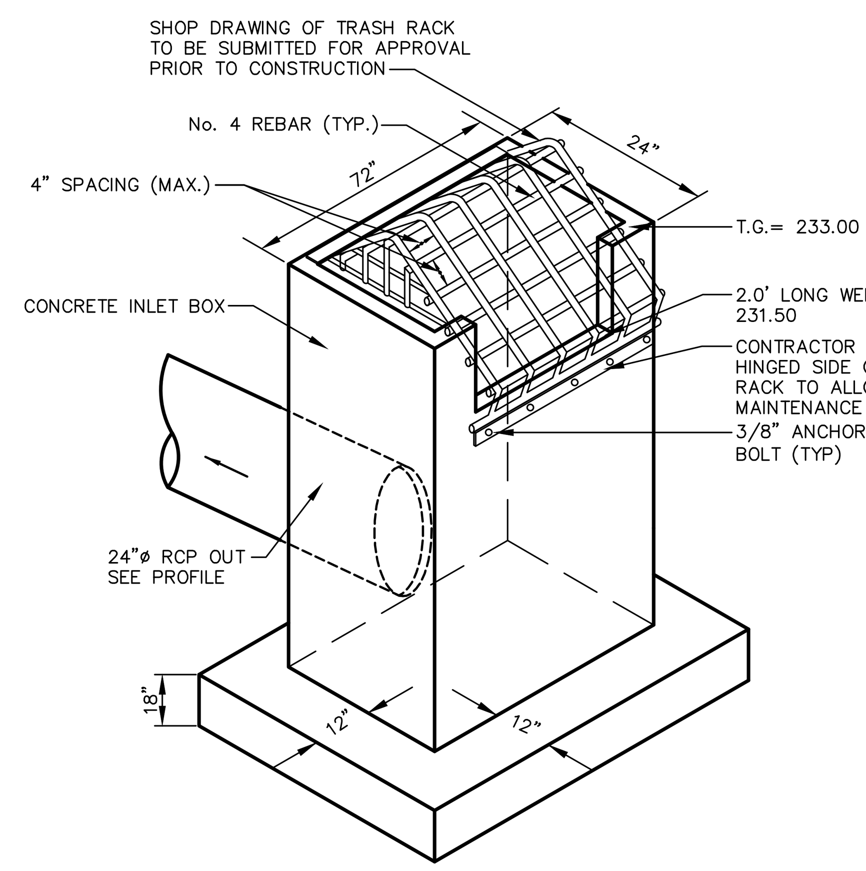

NOTE: AFTER RACK IS CONSTRUCTED (WELDED) THE ASSEMBLY SHALL BE PAINTED WITH A RUST PROOF COATING, 3 COATS.

3/31 **INLET BOX A-3 WITH WEIR DETAIL**

NOT TO SCALE

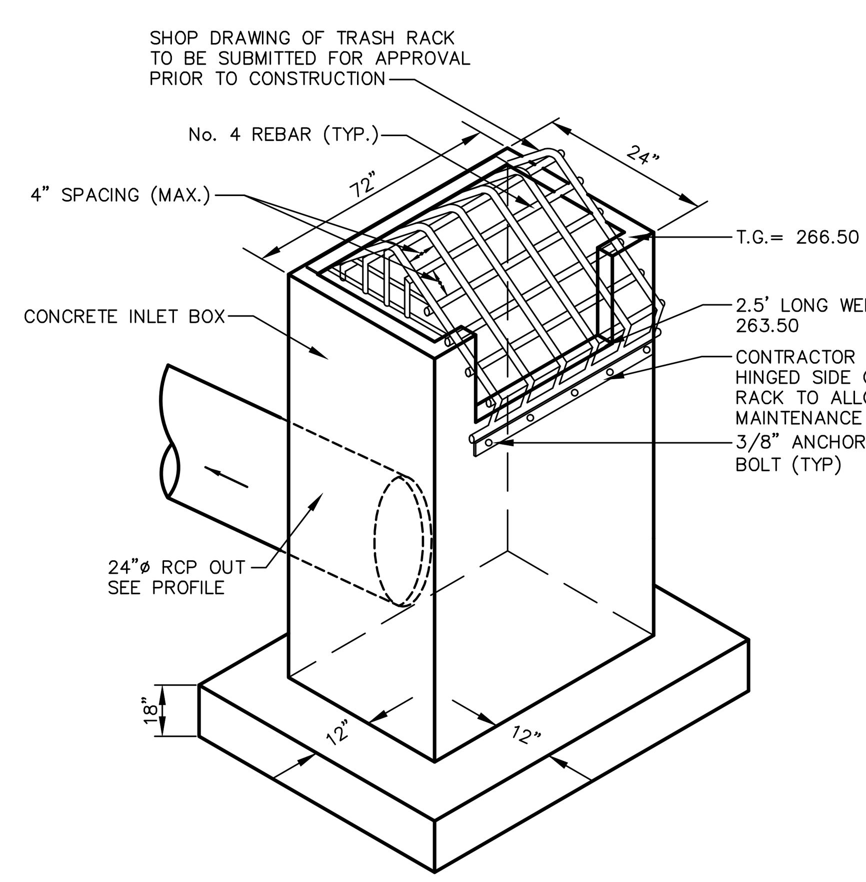

NOTE: AFTER RACK IS CONSTRUCTED (WELDED) THE ASSEMBLY SHALL BE PAINTED WITH A RUST PROOF COATING, 3 COATS.

4/31 **INLET BOX F-6 WITH WEIR DETAIL**

NOT TO SCALE

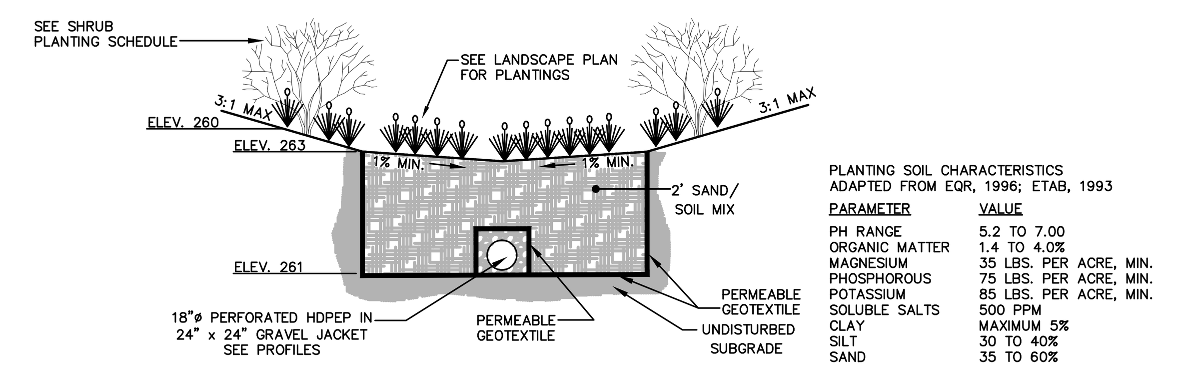

PLANTING SOIL CHARACTERISTICS
ADAPTED FROM EQR, 1996; ETAB, 1993

PARAMETER	VALUE
PH RANGE	5.2 TO 7.00
ORGANIC MATTER	1.4 TO 4.0%
MAGNESIUM	35 LBS. PER ACRE, MIN.
PHOSPHOROUS	75 LBS. PER ACRE, MIN.
POTASSIUM	85 LBS. PER ACRE, MIN.
SOLUBLE SALTS	500 PPM
CLAY	MAXIMUM 5%
SILT	30 TO 40%
SAND	35 TO 60%

Rain Garden Mix
ERNMX-180

20.00%	*Panicum rigidulum*	Redtop Panic Grass
20.00%	*Schizachyrium scoparium*	Little Bluestem
10.00%	*Elymus virginicus*	Virginia Wild Rye
5.00%	*Carex vulpinoidea*	Fox Sedge
5.00%	*Chasmanthium latifolium*	River Oats
5.00%	*Echinacea purpurea*	Purple Coneflower
5.00%	*Liatris spicata*	Marsh (Dense) Blazing Star
5.00%	*Rudbeckia hirta*	Black Eyed Susan
3.00%	*Monarda fistulosa*	Wild Bergamot
3.00%	*Penstemon digitalis*	Tall White Beard Tongue
2.00%	*Andropogon gerardii*	Big Bluestem
2.00%	*Asclepias incarnata*	Swamp Milkweed
2.00%	*Aster novae-angliae*	New England Aster
2.00%	*Baptisia australis*	Blue False Indigo
2.00%	*Geum laciniatum*	Rough Avens
2.00%	*Senna hebecarpa*	Wild Senna
2.00%	*Tradescantia ohiensis*	Ohio Spiderwort
2.00%	*Verbena hastata*	Blue Vervain
2.00%	*Zizia aurea*	Golden Alexanders
1.00%	*Agrostis perennans*	Autumn Bentgrass

Seeding Rate: 15 lb per acre, or 1/3-1/2 lb per 1,000 sq ft

Used where water quality, wildflower beauty, and wildlife are important. This mix should only be mowed during the dormant season.

BIO-RETENTION FACILITY PLANT BED CHARACTERISTICS:

1. THE PLANTING SOIL MIX SHOULD MEET THE REQUIREMENTS SET FORTH IN THE CHART ABOVE.

2. THE SOILS SHOULD BE FREE OF STONES, STUMPS, ROOTS, AND OTHER WOODY MATERIAL OVER 1" DIAMETER.

3. BRUSH OR SEEDS FROM NOXIOUS WEEDS SUCH AS JOHNSON GRASS, MUGWORT, NUTSEDGE, AND CANADIAN THISTLE SHOULD NOT BE PRESENT IN THE SOIL.

4. PLACEMENT OF THE PLANTING SOIL SHOULD BE IN LIFTS OF 12" TO 18", LOOSELY COMPACTED (TAMPED LIGHTLY WITH A DOZER OR BACKHOE BUCKET).

SPECIFICATIONS:

SUBGRADE PREPARATION

1. BRING SUB-GRADE OF BIORETENTION AREA TO LINE, GRADE, AND ELEVATIONS INDICATED. FILL AND LIGHTLY REGRADE ANY AREAS DAMAGED BY EROSION, PONDING, OR TRAFFIC COMPACTION. ALL BIORETENTION AREAS SHALL BE LEVEL GRADE ON THE BOTTOM.

RAIN GARDEN INSTALLATION

1. UPON COMPLETION OF SUB-GRADE WORK, THE ENGINEER SHALL BE NOTIFIED AND SHALL INSPECT AT HIS/HER DISCRETION BEFORE PRECEDING WITH BIORETENTION INSTALLATION.

2. FOR THE SUBSURFACE STORAGE/INFILTRATION BED INSTALLATION, AMENDED SOILS SHOULD BE PLACED ON THE BOTTOM TO THE SPECIFIED DEPTH.

3. PLANTING SOIL SHALL BE PLACED IMMEDIATELY AFTER APPROVAL OF SUB-GRADE PREPARATION/BED INSTALLATION. ANY ACCUMULATION OF DEBRIS OR SEDIMENT THAT TAKES PLACE AFTER APPROVAL OF SUB-GRADE SHALL BE REMOVED PRIOR TO INSTALLATION OF PLANTING SOIL AT NO EXTRA COST TO THE OWNER.

4. INSTALL PLANTING SOIL (EXCEEDING ALL CRITERIA) IN 18-INCH MAXIMUM LIFTS AND LIGHTLY COMPACT (TAMP WITH BACKHOE BUCKET OR BY HAND). KEEP EQUIPMENT MOVEMENT OVER PLANTING SOIL TO A MINIMUM – DO NOT OVER COMPACT. INSTALL PLANTING SOIL TO GRADES INDICATED ON THE DRAWINGS.

5. PLANT TREES AND SHRUBS ACCORDING TO SUPPLIER'S RECOMMENDATIONS AND ONLY FROM MID-MARCH THROUGH THE END OF JUNE OR FROM MID-SEPTEMBER THROUGH MID-NOVEMBER.

6. INSTALL SEED MIX.

7. PROTECT RAIN GARDENS FROM SEDIMENT AT ALL TIMES DURING CONSTRUCTION. HAY BALES, DIVERSION BERMS AND/OR OTHER APPROPRIATE MEASURES SHALL BE USED AT THE TOE OF SLOPES THAT ARE ADJACENT TO RAIN GARDENS TO PREVENT SEDIMENT FROM WASHING INTO THESE AREAS DURING SITE DEVELOPMENT.

8. WHEN THE SITE IS FULLY VEGETATED AND THE SOIL MANTLE STABILIZED THE PLAN DESIGNER SHALL BE NOTIFIED AND SHALL INSPECT THE RAIN GARDEN DRAINAGE AREA AT HIS/HER DISCRETION BEFORE THE AREA IS BROUGHT ONLINE AND SEDIMENT CONTROL DEVICES REMOVED.

9. WATER VEGETATION AT THE END OF EACH DAY FOR TWO WEEKS AFTER PLANTING IS COMPLETED.

MAINTENANCE ISSUES:

1. WHILE VEGETATION IS BEING ESTABLISHED, PRUNING AND WEEDING MAY BE REQUIRED.

2. DETRITUS MAY ALSO NEED TO BE REMOVED EVERY YEAR. PERENNIAL PLANTINGS MAY BE CUT DOWN AT THE END OF THE GROWING SEASON.

3. MULCH SHOULD BE RE-SPREAD WHEN EROSION IS EVIDENT AND BE REPLENISHED AS NEEDED. ONCE EVERY 2 TO 3 YEARS THE ENTIRE AREA MAY REQUIRE MULCH REPLACEMENT.

4. BIORETENTION AREAS SHOULD BE INSPECTED AT LEAST TWO TIMES PER YEAR FOR SEDIMENT BUILDUP, EROSION, VEGETATIVE CONDITIONS, ETC.

5. DURING PERIODS OF EXTENDED DROUGHT, BIORETENTION AREAS MAY REQUIRE WATERING.

6. TREES AND SHRUBS SHOULD BE INSPECTED TWICE PER YEAR TO EVALUATE HEALTH.

7. WHITPAIN TOWNSHIP SHALL BE RESPONSIBLE FOR THE INSTALLATION AND ULTIMATELY FOR THE LONG TERM MAINTENANCE OF THE PCSM BMP'S SHOWN HEREON AND HEREIN.

5/31 **BIO-RETENTION FACILITY CROSS SECTION**

NOT TO SCALE

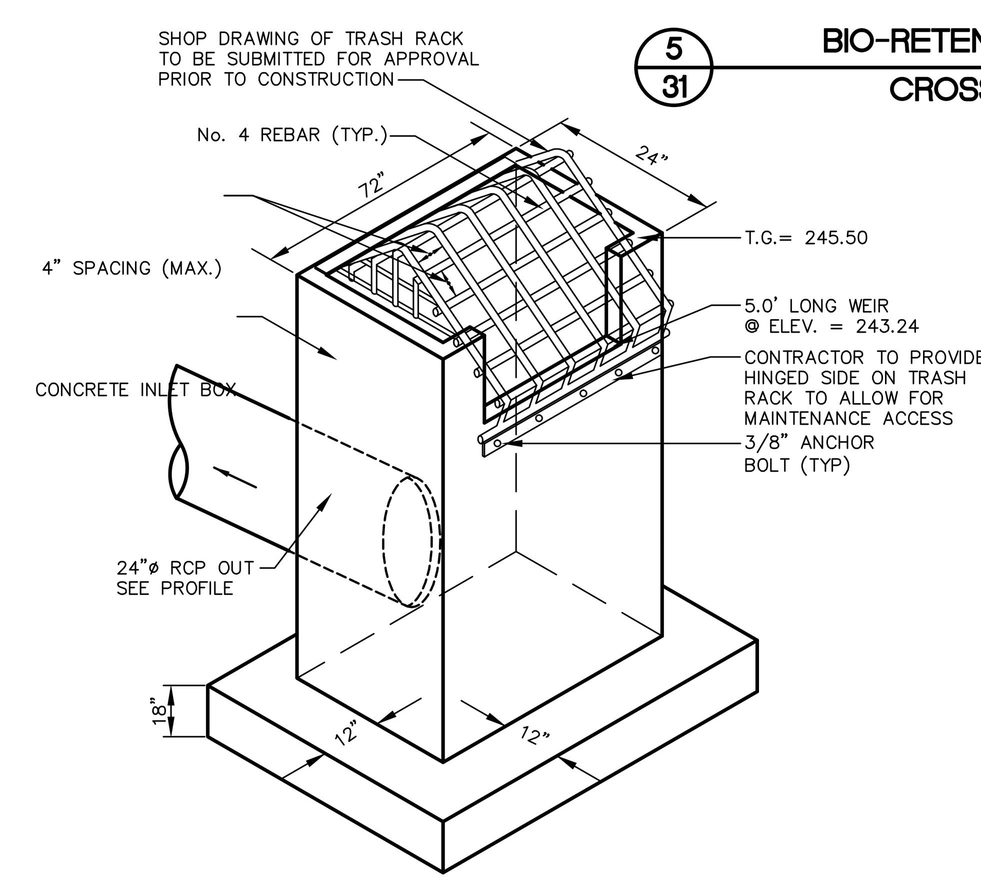

NOTE: AFTER RACK IS CONSTRUCTED (WELDED) THE ASSEMBLY SHALL BE PAINTED WITH A RUST PROOF COATING, 3 COATS.

6/31 **INLET BOX'S H-1.1 AND H-4 WITH WEIR DETAIL**

NOT TO SCALE

SOIL AMENDMENT SPECIFICATIONS

1. SOIL AMENDMENT MEDIA SHALL CONSIST OF LEAF COMPOST. (CONTRACTOR MAY REQUEST AN EQUIVALENT SUCH AS MULCH, MANURES, SAND, AND MANUFACTURED MICROBIAL SOLUTIONS.)

2. COMPOST SHALL BE ADDED AT A RATE OF 2:1 (SOIL:COMPOST). IF A PROPRIETARY PRODUCT IS USED, THE MANUFACTURER'S INSTRUCTIONS SHALL BE FOLLOWED IN TERMS OF MIXING AND APPLICATION RATE.

3. ON-SITE SOILS WITH AN ORGANIC CONTENT OF AT LEAST 5 PERCENT CAN BE PROPERLY STOCKPILED (TO MAINTAIN ORGANIC CONTENT) AND REUSED.

4. PROCEDURE: ROTOTILL, OR RIP THE SUBGRADE, REMOVE ROCKS, DISTRIBUTE COMPOST, SPREAD THE NUTRIENTS, ROTOTILL AGAIN.

5. A 3 INCHES COMPOST / AMENDMENT AND TILL UP TO 4 INCHES FOR MINOR COMPACTION.

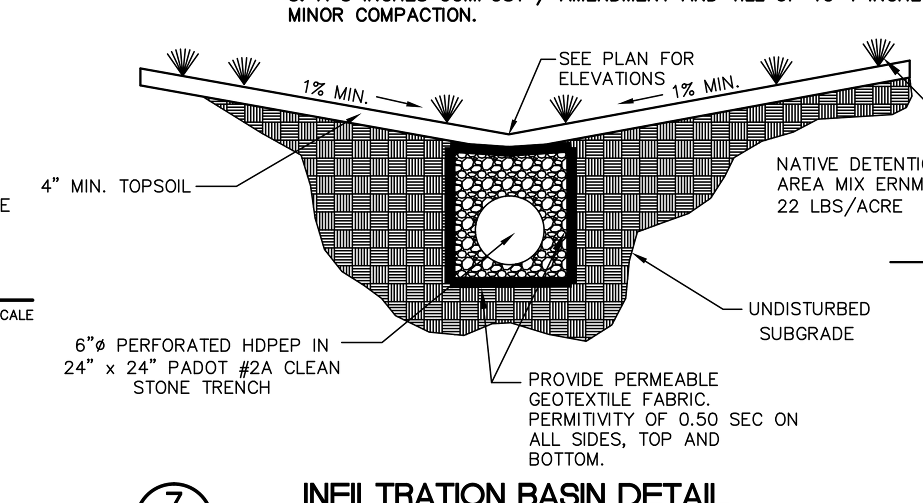

7/31 **INFILTRATION BASIN DETAIL**

NOT TO SCALE

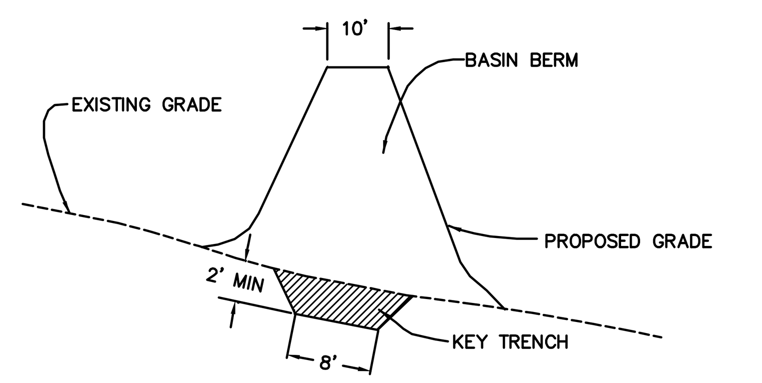

A CUTOFF TRENCH (KEY-WAY) OF IMPERVIOUS MATERIAL SHALL BE PROVIDED UNDER ALL EMBANKMENTS THAT REQUIRE FILL MATERIAL. THE CUTOFF TRENCH SHALL BE A MINIMUM OF EIGHT(8) FEET WIDE, TWO(2) FEET DEEP, AND HAVE SIDE SLOPES OF 1:1.

8/31 **BASIN BERM KEY TRENCH - TYPICAL FOR FILL CONDITIONS ONLY**

NOT TO SCALE

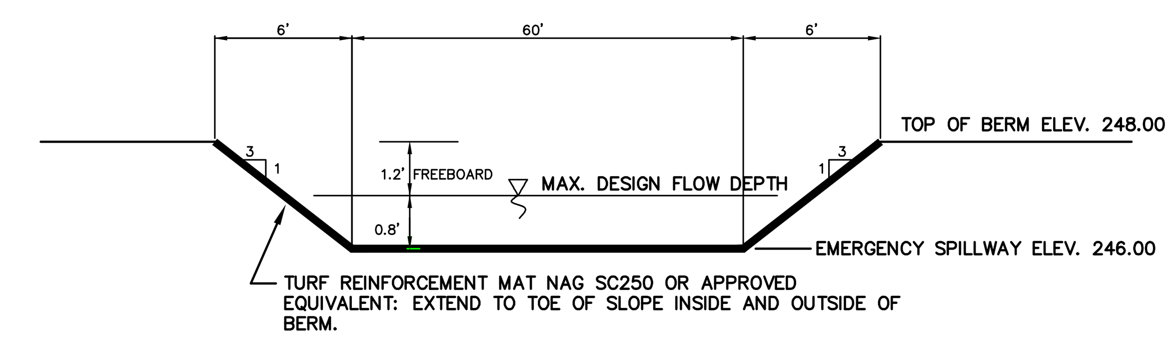

9/31 **BASIN A1 EMERGENCY SPILLWAY**

NOT TO SCALE

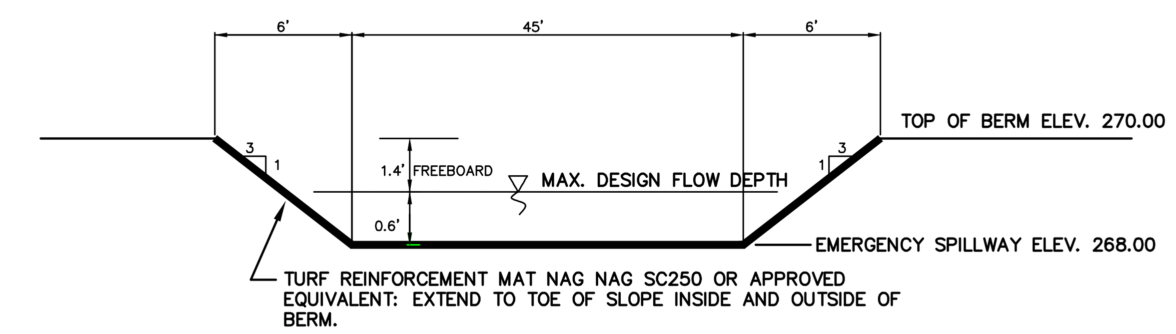

10/31 **BASIN A2 EMERGENCY SPILLWAY**

NOT TO SCALE

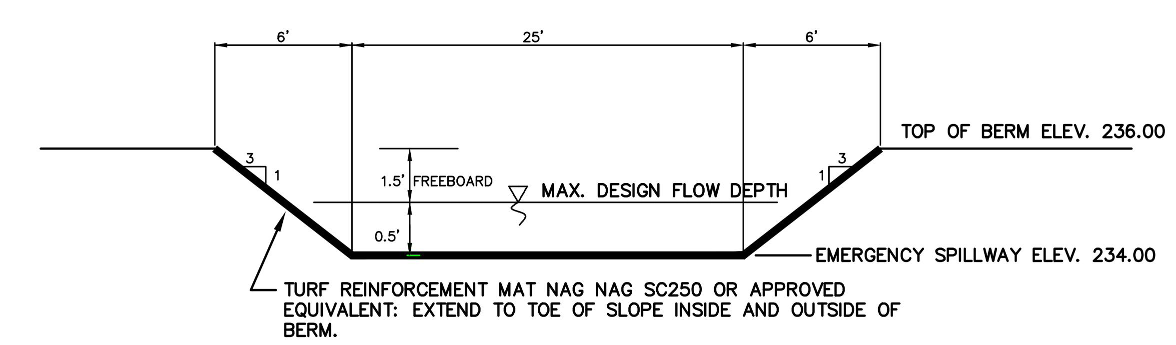

11/31 **BASIN B1 EMERGENCY SPILLWAY**

NOT TO SCALE

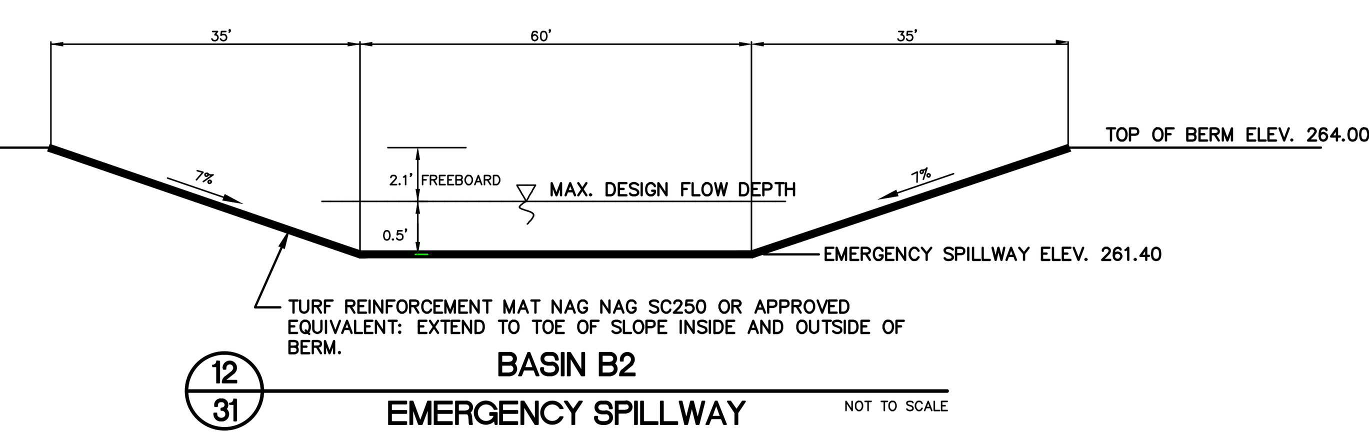

12/31 **BASIN B2 EMERGENCY SPILLWAY**

NOT TO SCALE

HIBBELN ENGINEERING COMPANY, L.L.C.
CONSULTING ENGINEERS
215·619·9070 PA, NJ, MD & DE
593 Skippack Pike, Suite 300
Blue Bell, Pennsylvania 19422
www.hibbelnengineering.com
IN CONJUNCTION WITH:
LandConcepts
593 Skippack Pike • Suite 300 • Blue Bell, PA 19422

COOK TRACT ATHLETIC FIELDS

PREPARED FOR
WHITPAIN TOWNSHIP
SITE SITUATE IN
WHITPAIN TOWNSHIP MONTGOMERY COUNTY, PENNSYLVANIA

ALL DOCUMENTS PREPARED BY HIBBELN ENGINEERING COMPANY, L.L.C. ARE INSTRUMENTS OF SERVICE IN RESPECT OF THE PROJECT. THEY ARE NOT INTENDED OR REPRESENTED TO BE SUITABLE FOR REUSE BY OWNER OR OTHERS OR EXTENSIONS OF THE PROJECT OR ON ANY OTHER PROJECT. ANY REUSE WITHOUT WRITTEN VERIFICATION OR ADAPTATION BY HIBBELN ENGINEERING COMPANY, L.L.C. FOR THE SPECIFIC PURPOSE INTENDED WILL BE AT OWNERS SOLE RISK AND WITHOUT LIABILITY OR LEGAL EXPOSURE TO HIBBELN ENGINEERING COMPANY, L.L.C.; AND OWNER SHALL INDEMNIFY AND HOLD HARMLESS HIBBELN ENGINEERING COMPANY, L.L.C. FROM ALL CLAIMS, DAMAGES, LOSSES AND EXPENSES ARISING OUT OF OR RESULTING THEREFROM.

NO.	REVISIONS	
6	PER ADDITION OF SEDIMENT BASIN B PHASE 4 PLAN	JUNE 18, 2012
5	PER MCCD LETTER (2-9-12)	FEBRUARY 10, 2012
4	PER STORM SYTEM 'B'	JANUARY 31, 2012
3	PER MCCD LETTER (1/3/12)	JANUARY 5, 2012
2	PER SANITARY SEWER RELOCATION	DECEMBER 19, 2011
1	100% COMPLETION PLAN	NOVEMBER 22, 2011
	PLAN ORIGINATION DATE	AUGUST 26, 2011

HIBBELN ENGINEERING COMPANY, L.L.C.
CONSULTING ENGINEERS

PCSM CONSTRUCTION DETAILS PLAN

COOK TRACT ATHLETIC FIELDS
SITE SITUATE IN
WHITPAIN TOWNSHIP MONTGOMERY COUNTY, PENNSYLVANIA

PROJECT MANAGER:	DRAFTED BY:
DSC/AJH	MLW
PROJECT NUMBER: 12460	DRAWING FILE: #12460_SHT29-37
PLAN SCALE: N.T.S.	PLAN SHEET NUMBER 31 OF 38

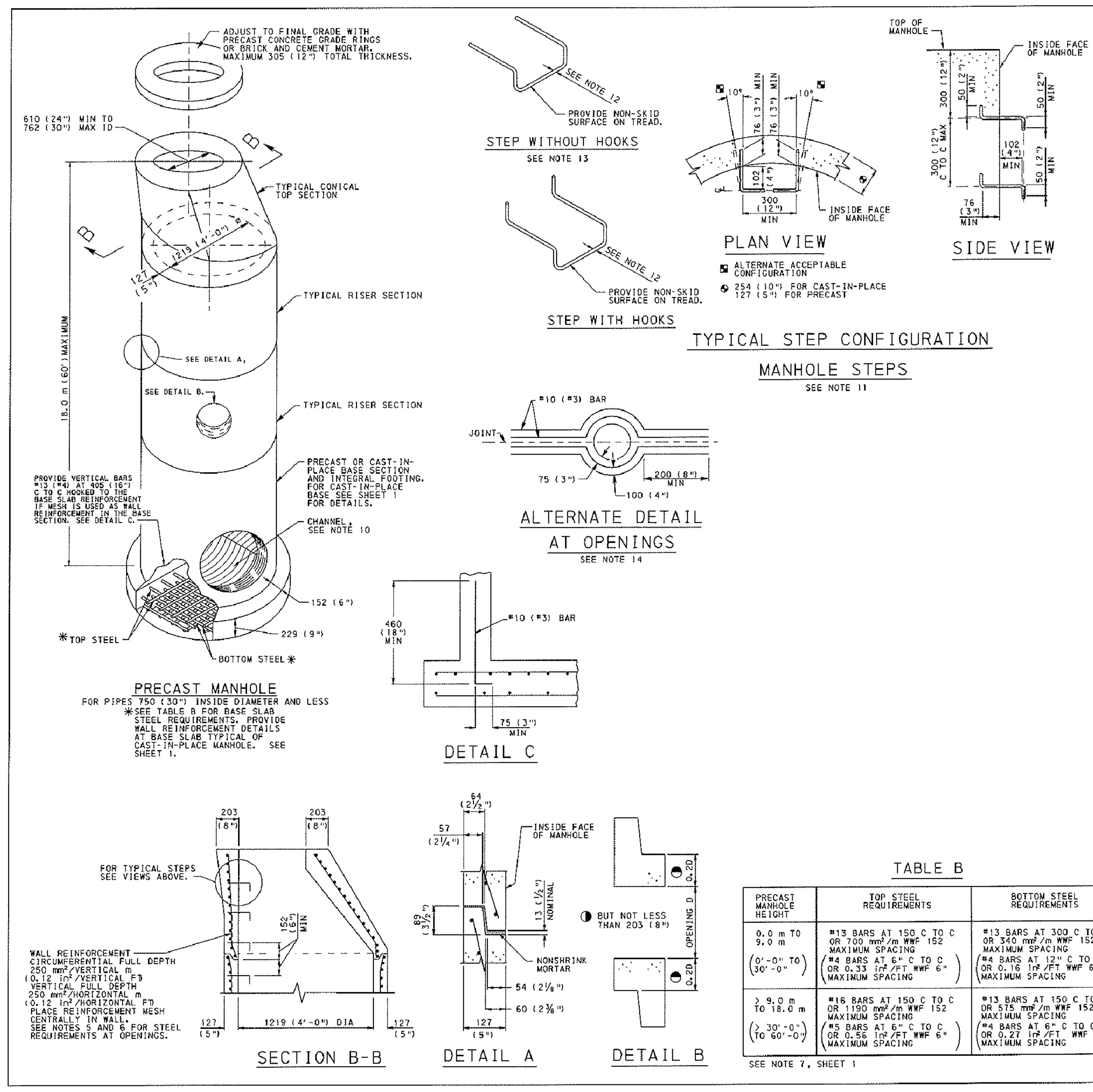

TABLE B

PRECAST MANHOLE HEIGHT	TOP STEEL REQUIREMENTS	BOTTOM STEEL REQUIREMENTS
0.0 m TO 9.0 m (0'-0" TO 30'-0")	#13 BARS AT 150 C TO C OR 700 mm²/m WWF 152 MAXIMUM SPACING (#4 BARS AT 6" C TO C OR 0.33 in²/FT WWF 6" MAXIMUM SPACING)	#13 BARS AT 300 C TO C OR 340 mm²/m WWF 152 MAXIMUM SPACING (#4 BARS AT 12" C TO C OR 0.16 in²/FT WWF 6" MAXIMUM SPACING)
> 9.0 m TO 18.0 m (> 30'-0" TO 60'-0")	#16 BARS AT 150 C TO C OR 1190 mm²/m WWF 152 MAXIMUM SPACING (#5 BARS AT 6" C TO C OR 0.56 in²/FT WWF 6" MAXIMUM SPACING)	#13 BARS AT 150 C TO C OR 575 mm²/m WWF 152 MAXIMUM SPACING (#4 BARS AT 6" C TO C OR 0.27 in²/FT WWF 6" MAXIMUM SPACING)

SEE NOTE 7, SHEET 1

NOTES

1. PRECAST MANHOLES MEETING THE REQUIREMENTS OF PUBLICATION 408, SECTION 714, MAY BE SUBSTITUTED FOR THE STANDARD CAST-IN-PLACE MANHOLE. FOR DEVIATION OR MODIFICATION OF THE STANDARDS, SUBMIT SHOP DRAWINGS FOR APPROVAL.
2. FOR CONSTRUCTION REQUIREMENTS SEE NOTE 1, SHEET 1. FOR DESIGN REQUIREMENTS SEE NOTE 1, SHEET 5.
3. FOR PERMISSIBLE LOCATION OF PIPES SEE PLAN VIEW AND NOTE 3, SHEET 1.
4. FOR RISERS OR BASE SECTIONS WITH OPENINGS, PROVIDE A MINIMUM HEIGHT OF SECTION SO AS TO PROVIDE AN UNCUT WALL EQUAL TO 20% OF THE OPENING, BUT NO LESS THAN 203 (8"), BETWEEN THE OPENING AND THE CLOSEST JOINT BETWEEN RISERS - SEE DETAIL B.
5. FOR PRECAST RISER OR BASE SECTIONS WITH ONE OPENING LOCATED AT DEPTHS TO 18.0 m (60'), PROVIDE CIRCUMFERENTIAL REINFORCEMENT IN ACCORDANCE WITH SECTION B-B. FOR SECTIONS WITH TWO OR MORE OPENINGS, LOCATED AT DEPTH OF 3.0 m (10') AND LESS, PROVIDE CIRCUMFERENTIAL REINFORCEMENT EQUAL TO 340 mm²/VERTICAL m (0.16 in²/VERTICAL FT) FOR THE HEIGHT OF RISER OR BASE SECTION.
6. FOR RISERS OR BASE SECTIONS WITH TWO OR MORE OPENINGS, LOCATED AT A DEPTH GREATER THAN 3.0 m (10'), BUT LESS THAN OR EQUAL TO 7.6 m (25'), PROVIDE CIRCUMFERENTIAL REINFORCEMENT EQUAL TO 930 mm²/VERTICAL m (0.44 in²/VERTICAL FT) FOR THE HEIGHT OF THE RISER OR BASE SECTION.
7. FOR RISERS OR BASE SECTIONS WITH TWO OR MORE OPENINGS, LOCATED AT DEPTHS GREATER THAN 7.6 m (25'), USE A 254 (10") THICK WALL RISER OR BASE SECTION WITH CIRCUMFERENTIAL REINFORCEMENT EQUAL TO 470 mm²/VERTICAL m (0.22 in²/VERTICAL FT) EACH FACE.
8. MARK RISERS OR BASE SECTIONS WITH HOLES CLEARLY WITH MAXIMUM ALLOWABLE DEPTH.
9. PROVIDE ADDITIONAL REINFORCEMENT BARS AROUND OPENINGS AS SHOWN ON REINFORCEMENT DETAILS AT OPENINGS SHEET 1.
10. FOR CHANNEL DETAILS IN PRECAST MANHOLE SEE CAST-IN-PLACE MANHOLE SHEET 1.
11. PROVIDE MANHOLE STEPS MEETING THE REQUIREMENTS OF PUBLICATION 408, SECTION 605.2(c). ALTERNATE CONFIGURATIONS AND DIMENSIONS, AS APPROVED BY THE ENGINEER, MAY BE USED.
12. PROVIDE MINIMUM 25 (1") SECTION DIMENSION FOR METAL STEPS. PROVIDE MINIMUM 19 (¾") SECTION DIMENSION FOR NON-DETERIORATING MATERIAL STEPS.
13. MECHANICAL ANCHOR REQUIRED FOR INSTALLATION OF STEPS WITHOUT HOOKS.
14. THE ALTERNATE OPENING REINFORCEMENT DETAIL IS NOT DESIRABLE BY DESIGN. USE IT TO MEET EXISTING PIPE ELEVATIONS.

NOTE: EITHER ALL METRIC OR ALL ENGLISH VALUES MUST BE USED ON PLANS. METRIC AND ENGLISH VALUES SHOWN MAY NOT BE MIXED.

COMMONWEALTH OF PENNSYLVANIA
DEPARTMENT OF TRANSPORTATION
BUREAU OF DESIGN

STANDARD MANHOLES
PRECAST MANHOLES &
MANHOLE STEPS

RECOMMENDED JUN. 1, 2010 — CHIEF, HWY. QA DIVISION | RECOMMENDED JUN. 1, 2010 — DIRECTOR, BUREAU OF DESIGN | SHT 3 OF 6 | RC-39M

1/32 **STANDARD MANHOLE DETAIL** N.T.S.

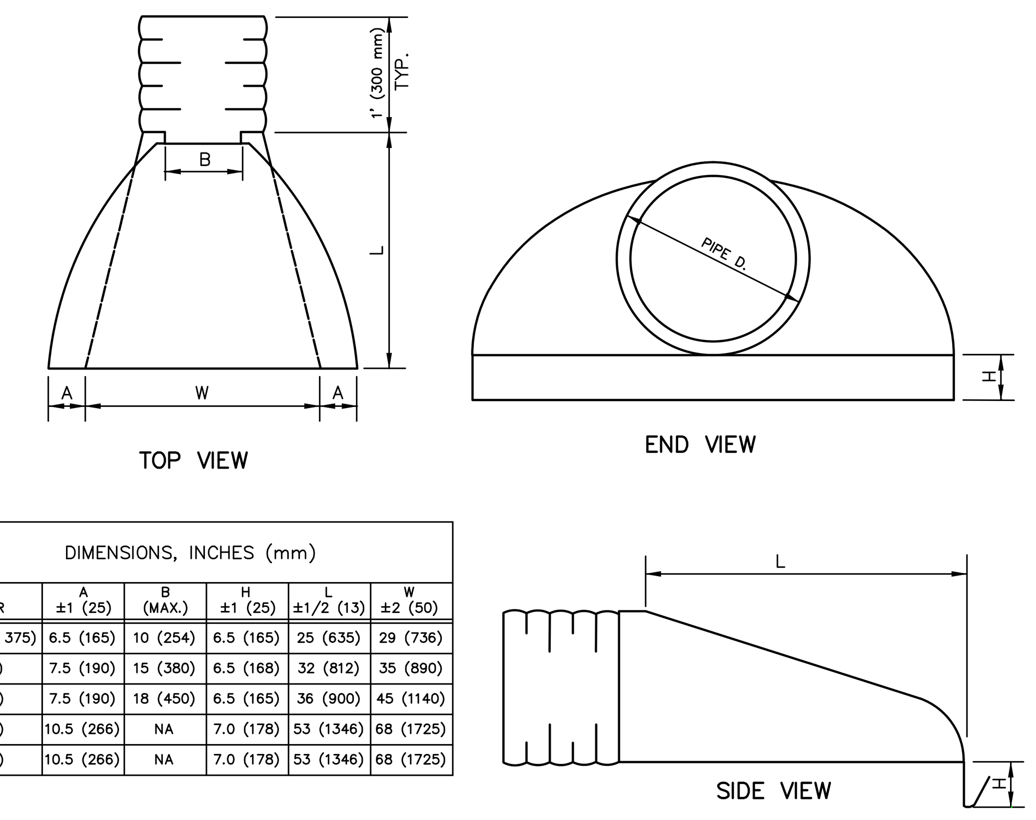

DIMENSIONS, INCHES (mm)					
PIPE DIAMETER	A ±1 (25)	B (MAX.)	H ±1 (25)	L ±1/2 (13)	W ±2 (50)
12, 15 (300, 375)	6.5 (165)	10 (254)	6.5 (165)	25 (635)	29 (736)
18 (450)	7.5 (190)	15 (380)	6.5 (168)	32 (812)	35 (890)
24 (600)	7.5 (190)	18 (450)	6.5 (165)	36 (900)	45 (1140)
30 (750)	10.5 (266)	NA	7.0 (178)	53 (1346)	68 (1725)
36 (900)	10.5 (266)	NA	7.0 (178)	53 (1346)	68 (1725)

3/32 **HDPE FLARED END SECTION DETAIL** N.T.S.

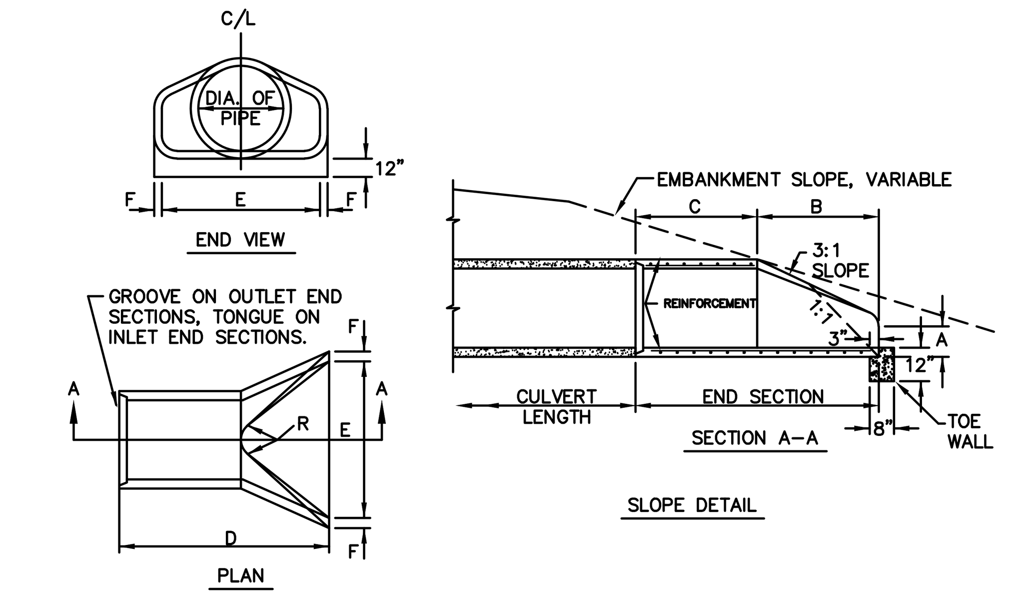

TABLE A – DIMENSIONS FOR END SECTIONS FOR CONCRETE PIPE							
DIAM.	A	B	C	D	E	F	R
18"	9"	2'-3"	3'-10"	6'-1"	3'-0"	2 1/2"	7 1/2"
21"	9"	3'-0"	3'-1"	6'-1"	3'-6"	2 3/4"	8"
24"	9 1/2"	3'-7 1/2"	2'-6"	6'-1 1/2"	4'-0"	3"	8"
27"	10 1/2"	4'-0"	2'-1 1/2"	6'-1 1/2"	4'-6"	3 1/4"	9"
30"	12"	4'-6"	1'-7 3/4"	6'-1 3/4"	5'-0"	3 1/2"	8"
33"	13 1/2"	4'-10 1/2"	3'-1 1/2"	8'-0"	5'-6"	3 3/4"	9"
36"	15"	5'-3"	2'-9"	8'-0"	6'-0"	4"	10"
42"	21"	5'-3"	2'-9"	8'-0"	6'-6"	4 1/2"	11"
48"	24"	6'-0"	2'-0"	8'-0"	7'-0"	5"	12"

4/32 **CONCRETE END SECTIONS**
PADOT RC-33M N.T.S.

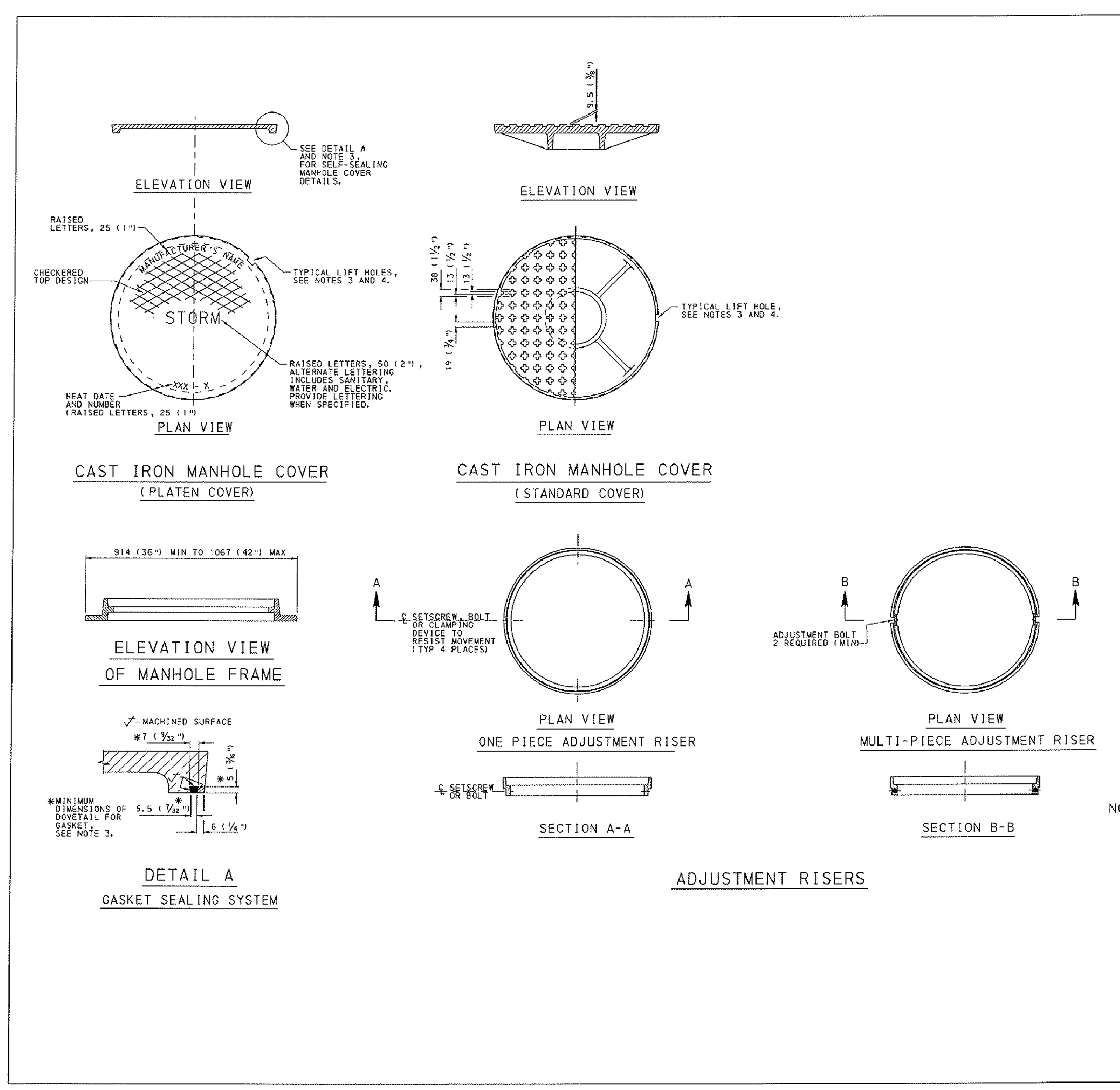

NOTES

1. PROVIDE MANHOLE FRAMES AND COVERS MEETING THE REQUIREMENTS OF PUBLICATION 408, SECTION 605.2(b). DESIGN MANHOLE FRAME, COVER AND GRADE ADJUSTMENT RINGS FOR PHL 93 (HS25) LIVE LOAD. IF MANHOLES ARE NOT IN OR ADJACENT TO ROADWAY, DESIGN FOR ALL POSSIBLE LIVE LOADS AS APPROVED BY THE DEPARTMENT.
2. PROVIDE MANHOLE FRAMES, COVERS AND GRADE ADJUSTMENT RISERS SUPPLIED BY A MANUFACTURER AS LISTED IN BULLETIN 15. FOR DEVIATION OR MODIFICATION TO THE STANDARDS, SUBMIT SHOP DRAWINGS FOR APPROVAL.
3. PROVIDE A GASKET SEALING SYSTEM, DOVETAIL GROOVE AND CONTINUOUS GASKET, AS INDICATED IN DETAIL A, TO PREVENT INFLOW THROUGH THE BEARING SURFACES, OF SURFACE RUNOFF WATER INTO THE MANHOLE SYSTEM, WHEN SPECIFIED. PROVIDE 6 (¼") DIA ONE PIECE SELF-SEAL POLYISOPRENE ROUND GASKET, 40 DUROMETER GLUED IN PLACE. PROVIDE TWO (2) LIFT HOLES AT 180° TO FACILITATE COVER REMOVAL FOR SELF-SEALING MANHOLE COVER.
4. PROVIDE ONE LIFT HOLE TO FACILITATE COVER REMOVAL FOR NON-SEALING MANHOLE COVER.
5. FRAME AND GRADE ADJUSTMENT RISER TO HAVE A MINIMUM BEARING SEAT OF 25 (1") FOR COVER.
6. LOCATE TOP OF FRAME OR ADJUSTMENT RISER 3 (⅛") BELOW THE TOP OF ROADWAY SURFACE.
7. PROVIDE GRADE ADJUSTMENT RISERS MEETING THE REQUIREMENTS OF PUBLICATION 408, SECTION 606, AND AS MODIFIED HEREIN:
   A. CUSTOM FABRICATE EACH ADJUSTMENT RISER FROM MEASUREMENTS PROVIDED WITH EACH ORDER.
   B. MANUFACTURE BAR STOCK AND RETAINER CLIP FROM U.S. MADE CARBON STEEL MEETING OR EXCEEDING THE MINIMUM REQUIREMENTS OF ASTM A-36M.
   C. REQUIRE FULL CIRCUMFERENTIAL WELDS ON BOTH TOP AND BOTTOM RINGS. MAKE THE INNER WELD A BEVEL GROOVE WELD (FLUSH FINISH) FOR PROPER SEATING OF MANHOLE LID AND MAKE THE OUTER WELD A FILLET WELD.
   D. MAKE THE MINIMUM WIDTH OF BOTTOM AND TOP BAR STOCK 25 (1") AND 10 (⅜"), RESPECTIVELY.
   E. TAP THE BOTTOM BAR STOCK FOR MULTI-PIECE ADJUSTMENT RISER FOR M14 ADJUSTMENT BOLT.
   F. REINFORCE THE ADJUSTMENT RISER ADEQUATELY TO PREVENT BENDING.
   G. PROVIDE AN ADJUSTMENT RISER WHICH IS FLUSH WITH COVER AND DOES NOT ALLOW EXCESSIVE MOVEMENT. PROVIDE AN ADJUSTMENT RISER WHICH CONFORMS TO THE SHAPE OF THE ORIGINAL FRAME.
8. ATTACH FRAME AND/OR PRECAST CONCRETE GRADE RINGS RIGIDLY TO TOP OF MANHOLE. USE 3-M14 (1/2") THREADED STUDS WITH HEX HEAD NUTS AND WASHERS, INSERTED THROUGH AT 16 (⅝") DIA HOLES THROUGH FRAME AND/OR RINGS. SPACE HOLES AT 120° AND 50 (2") FROM OUTSIDE EDGE OF FRAME. EMBED STUDS 102 (4") MINIMUM INTO MANHOLE. GROUT STUDS INTO MANHOLE.
9. SET THE BASE OF THE FRAME AND/OR PRECAST CONCRETE GRADE RINGS IN A BED OF CEMENT MORTAR.

NOTE: EITHER ALL METRIC OR ALL ENGLISH VALUES MUST BE USED ON PLANS. METRIC AND ENGLISH VALUES SHOWN MAY NOT BE MIXED.

COMMONWEALTH OF PENNSYLVANIA
DEPARTMENT OF TRANSPORTATION
BUREAU OF DESIGN

STANDARD MANHOLES
COVERS, FRAMES AND
ADJUSTMENT RISERS

RECOMMENDED JUN. 1, 2010 — CHIEF, HWY. QA DIVISION | RECOMMENDED JUN. 1, 2010 — DIRECTOR, BUREAU OF DESIGN | SHT 5 OF 6 | RC-39M

2/32 **STANDARD MANHOLE COVER AND RISER** N.T.S.

INLET NOTES:

1. CONSTRUCT INLET BOXES IN ACCORDANCE WITH THE REQUIREMENTS OF PUBLICATION 408, SECTION 605, FOR CAST-IN-PLACE. UNITS.
2. PROVIDE INLET BOXES WITH 24" x 45 1/4" STANDARD OPENING TO ACCOMMODATE THE STANDARD TOP COMPONENTS.
3. PROVIDE 6" INLET WALLS, UNLESS OTHERWISE INDICATED, FOR CONCRETE CONSTRUCTION AND 8" INLET WALLS FOR BRICK CONSTRUCTION.
4. INLETS THAT EXCEED THE MAXIMUM HEIGHT SHOWN SHALL REQUIRE A SPECIAL DETAIL AND DESIGN FOR THE INLET WALLS AND BASE. CONSTRUCT INLETS THAT EXCEED 5 FEET IN HEIGHT WITH STEPS SIMILAR TO MANHOLES.
5. DO NOT EXTEND PIPE BLOCK-OUTS INTO THE BASE WHEN THE BASE IS NOT MONOLITHIC WITH THE INLET WALLS.
6. LOCATE PIPE OR PIPES, AS INDICATED, WITH THE INLET BOTTOM SHAPED TO CHANNEL THE FLOW TOWARD THE OUTLET PIPE.
7. PLACE #4 REINFORCEMENT BARS, MINIMUM 12 INCHES LONG, SPACED AT 12 INCHES C. TO C., AS DOWELS BETWEEN THE INLET BASE AND WALLS WHEN THE CONCRETE WALLS AND BASE ARE NOT CONSTRUCTED MONOLITHICALLY. THE DOWELS MAY BE ELIMINATED IF THE ALTERNATE JOINT SHOWN IN DETAIL A IS CONSTRUCTED.
8. FOR CAST-IN-PLACE CONSTRUCTION, WHEN THE BASE IS CONSTRUCTED MONOLITHICALLY WITH VERTICAL WALLS, PROVIDE 3 INCH MINIMUM FROM THE BOTTOM OF THE PIPE TO THE BOTTOM OF THE INLET BOX.
9. FOR PIPE DIAMETERS LARGER THAN 36" IN THIS WALL FOR A TYPE 1, USE A MODIFIED TYPE 1 INLET BOX.
10. FOR PIPE DIAMETERS LARGER THAN 48" R.C.C.P. OR 54" C.M.P. IN THIS WALL FOR A TYPE 2, USE A MODIFIED TYPE 2, USE A MODIFIED TYPE 11 INLET BOX.
11. FOR PIPE DIAMETERS LARGER THAN 48" R.C.C.P. OR 54 C.M.P. IN THE LONG DIRECTION OR LARGER THAN 36" IN THE SHORT DIRECTION, A SPECIAL AND DESIGN IS REQUIRED.

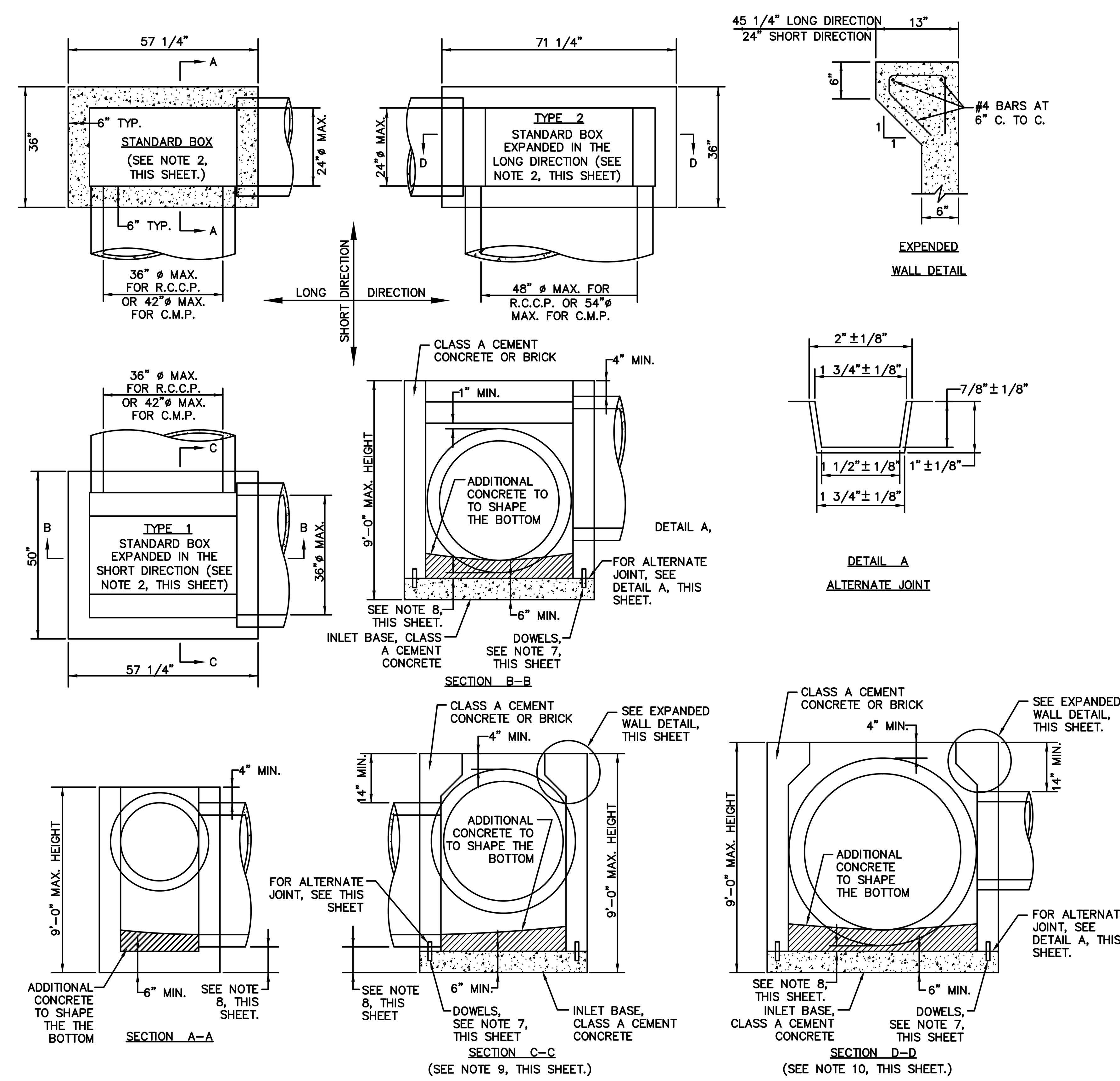

ADDITIONAL CONCRETE CHANNEL BOTTOM DETAIL AS NOTED ABOVE SHALL BE PROVIDED IN ALL INLET BOXES EXCEPT INLETS DESIGNATED AS SUMPED INLETS. REFER TO SUMPED INVERT INLET BOX DETAIL THIS SHEET.

5/32 **INLET BOX DETAIL** NOT TO SCALE

HIBBELN ENGINEERING COMPANY, L.L.C.
CONSULTING ENGINEERS
215-619-9070 PA, NJ, MD & DE
593 Skippack Pike, Suite 300
Blue Bell, Pennsylvania 19422
www.hibbelnengineering.com
IN CONJUNCTION WITH:
LandConcepts
593 Skippack Pike • Suite 300 • Blue Bell, PA 19422

COOK TRACT ATHLETIC FIELDS

PREPARED FOR
WHITPAIN TOWNSHIP
SITE SITUATE IN
WHITPAIN TOWNSHIP
MONTGOMERY COUNTY, PENNSYLVANIA

ALL DOCUMENTS PREPARED BY HIBBELN ENGINEERING COMPANY, L.L.C. ARE INSTRUMENTS OF SERVICE IN RESPECT OF THE PROJECT. THEY ARE NOT INTENDED OR REPRESENTED TO BE SUITABLE FOR REUSE BY OWNER OR OTHERS ON EXTENSIONS OF THE PROJECT OR ON ANY OTHER PROJECT. ANY REUSE WITHOUT WRITTEN VERIFICATION OR ADAPTATION BY HIBBELN ENGINEERING COMPANY, L.L.C. FOR THE SPECIFIC PURPOSE INTENDED WILL BE AT OWNERS SOLE RISK AND WITHOUT LIABILITY OR LEGAL EXPOSURE TO HIBBELN ENGINEERING COMPANY, L.L.C.; AND OWNER SHALL INDEMNIFY AND HOLD HARMLESS HIBBELN ENGINEERING COMPANY, L.L.C. FROM ALL CLAIMS, DAMAGES, LOSSES AND EXPENSES ARISING OUT OF OR RESULTING THEREFROM.

NO.	REVISIONS	
6	PER ADDITION OF SEDIMENT BASIN B PHASE 4 PLAN	JUNE 18, 2012
5	PER MCCD LETTER (2-9-12)	FEBRUARY 10, 2012
4	PER STORM SYTEM 'B'	JANUARY 31, 2012
3	PER MCCD LETTER (1/3/12)	JANUARY 5, 2012
2	PER SANITARY SEWER RELOCATION	DECEMBER 19, 2011
1	100% COMPLETION PLAN	NOVEMBER 22, 2011
	PLAN ORIGINATION DATE	AUGUST 26, 2011

HIBBELN ENGINEERING COMPANY, L.L.C. CONSULTING ENGINEERS

CONSTRUCTION DETAILS PLAN 'A'

COOK TRACT ATHLETIC FIELDS
SITE SITUATE IN
WHITPAIN TOWNSHIP
MONTGOMERY COUNTY, PENNSYLVANIA

PROJECT MANAGER: DSC/AJH	DRAFTED BY: MLW
PROJECT NUMBER: 12460	DRAWING FILE: #12460_SHT29-37
PLAN SCALE: N.T.S.	PLAN SHEET NUMBER 32 OF 38

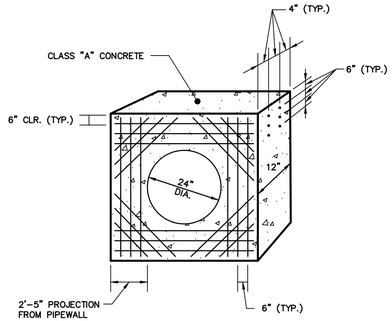

1/33 REINFORCED PRECAST CONCRETE ANTI-SEEP COLLAR

NOT TO SCALE

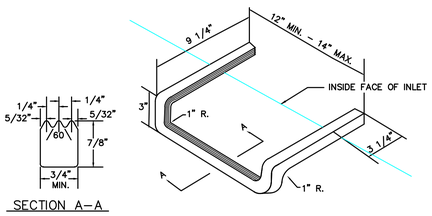

NOTES: STEPS TO BE FABRICATED OF ALUMINUM ALLOY 6061-T6

PORTIONS OF STEPS TO BE EMBEDDED IN WALLS OF MANHOLES OR CHAMBERS TO BE DIPPED IN HEAVY BODIED BITUMINOUS PAINT, OR PROVIDE PLASTIC INSERT.

2/33 INLET STEP

N.T.S.

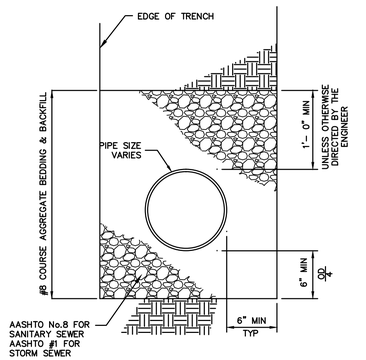

3/33 STANDARD PIPE BEDDING

NOT TO SCALE

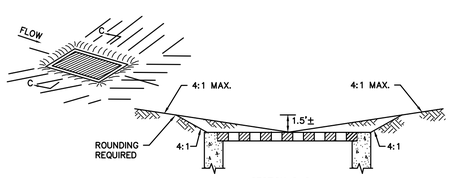

4/33 SUMPED TYPE 'M' INLET

NOT TO SCALE

TYPE D-W ENDWALL SCHEDULE OF DIMENSIONS

PIPE I.D.	L1	L2	W	H
15" & 18"	5'-4"	3'-0"	3'-0"	3'-0"
21" & 24"	5'-10"	3'-6"	3'-6"	3'-6"
27" & 30"	6'-4"	4'-0"	4'-0"	4'-0"
36"	7'-0"	4'-6"	4'-6"	4'-8"
42"	7'-7"	5'-1"	5'-0"	5'-1"
48"	8'-2"	5'-10"	7'-0"	5'-10"
54"	8'-9"	6'-3"	8'-0"	6'-3"
60"	9'-4"	7'-0"	9'-3"	7'-0"
66"	9'-11"	7'-7"	10'-3"	7'-7"
72"	10'-6"	8'-2"	11'-6"	8'-2"

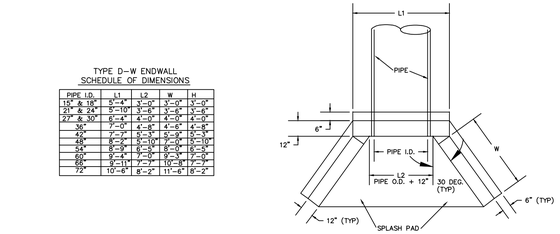

5/33 TYPE DW HEADWALL/ENDWALL

NOT TO SCALE

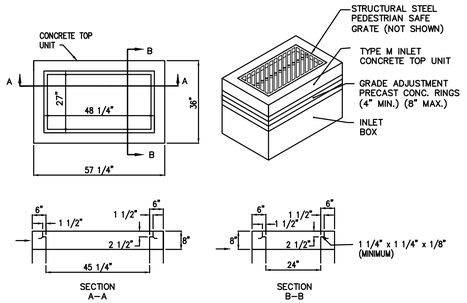

NOTES:

1. CONSTRUCTION REQUIREMENTS
   A. CONSTRUCT IN ACCORDANCE WITH: PENNDOT 408, CURRENT EDITION, SECTIONS 605, 606, 714; AND AS MODIFIED HEREIN.
   B. MINIMUM CONCRETE COMPRESSIVE STRENGTH:
      CAST-IN-PLACE 4000 PSI
      PRECAST 4000 PSI
   C. PROVIDE STEEL REINFORCEMENT IN ACCORDANCE WITH SEC. 709. PROVIDE MINIMUM YIELD STRENGTH OF 60,000 P.S.I.
   D. CLEAR COVER FOR STEEL:
      WALLS: CAST-IN-PLACE 2"
      PRECAST 1 1/2"
      FOOTINGS: CAST-IN-PLACE 2 1/2" (TOP BARS)
      3" (BOTTOM BARS)
      2" (SIDE COVER)
      PRECAST 2" (TOP BARS)
      1 1/2" (BOTTOM BARS)
      1 1/2" (SIDE COVER)
      SLABS CAST-IN-PLACE 2" (TOP AND BOTTOM BARS)

2. THIS SHEET DEPICTS THE VARIOUS COMPONENTS REQUIRED FOR COMPLETE INLET ASSEMBLIES FOR INDIVIDUAL COMPONENTS AND OTHER SPECIAL DETAILS, FOR ADDITIONAL INFORMATION REFER TO PENNDOT RC STANDARDS, RC-34 CURRENT EDITION.

3. THIS TYPE OF INLET SHOWN IS SUITED FOR A PARTICULAR SITUATION AS FOLLOWS: TYPE M INLET IS DESIGNATED FOR INSTALLATION IN MEDIAN AREAS AND MOUNTABLE CURBS.

4. THE SELECTION OF COMPONENTS TO ACHIEVE A SPECIFIED INLET ASSEMBLY IS THE CONTRACTORS RESPONSIBILITY

5. USE PRECAST CONCRETE OR STEEL GRADE ADJUSTMENT RINGS ON ALL INLETS.

6. FOR WALL REINFORCEMENT, BOTH DIRECTIONS, USE 0.12 IN.2/FT. MIN. EACH WAY, EACH FACE.

7. FOR FOOTING REINFORCEMENT, TOP AND BOTTOM, USE #4 BARS AT12" CENTERS EACH WAY OR 0.20 IN.2/FT. W.W.F.(6" MAX. SPACING).

8. FRAMES AND GRATES SHALL BE STRUCTURAL STEEL PEDESTRIAN SAFE.

9. PROVIDE WEEP HOLES FOR DRAINAGE AT THE DIRECTION OF THE TOWNSHIP ENGINEER OR HIS/HER REPRESENTATIVE IN THE FIELD.

10. DOWEL PIN ALL HOODS INTO CURB W/(2) #8X1'-0" DOWEL BARS.

11. CONSTRUCT INLETS THAT EXCEED 5 FEET IN HEIGHT WITH STEPS SIMILAR TO MANHOLES.

12. PRECAST CONCRETE ADJUSTMENT RINGS REQUIRED FOR UP TO 8' OF ADJUSTMENT. A PRECAST CONCRETE RISER OR RISERS IS REQUIRED FOR ADJUSTMENT 12' AND ABOVE.

13. ALL INLETS REQUIRE CONSTRUCTION JOINTS OR KEYS FOR RISER SECTIONS AND PRECAST COVER ADJUSTMENT SLABS.

14. MASTIC OR NON SHRINK GROUT REQUIRED AT ALL CONSTRUCTION JOINTS OR KEYS.

6/33 TYPE 'M' INLET

NOT TO SCALE

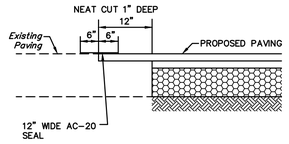

NOTE:
PROVIDE NEAT CUT AT ALL INTERFACE WITH EXISTING PARKING LOT, (I.E., TRENCHES, CURB, ETC.)

7/33 NEAT CUT DETAIL

NOT TO SCALE

NOTES:

1. MATERIALS AND CONSTRUCTION SHALL MEET THE REQUIREMENTS OF PADOT PUBLICATION 408, SECTION 630 FOR PLAIN CEMENT AND DEPRESSED CURB, SECTION 640 FOR PLAIN CEMENT CONCRETE CURB.

2. SPACE CONTRACTION JOINTS IN UNIFORM LENGTHS OR SECTIONS. PROVIDE CONTRACTION JOINTS @ 10' MIN. INTERVALS, MIN. 2" DEEP.

3. PLACE 3/4-INCH PRE-MOLDED EXPANSION JOINT FILLER MATERIAL EVERY 30' IN ADDITION TO AT STRUCTURES AND AT THE END OF THE WORK DAY. CUT MATERIAL TO CONFORM TO AREA ADJACENT TO CURB OR TO CONFORM TO CROSS SECTIONAL AREA OF CURB.

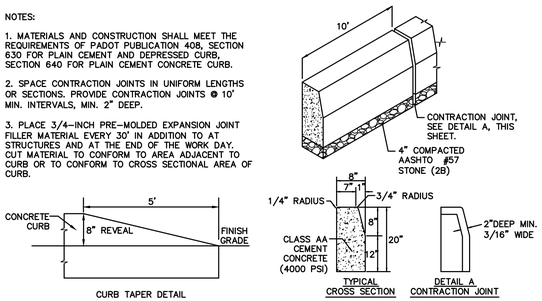

8/33 8" CONCRETE VERTICAL CURB

NOT TO SCALE

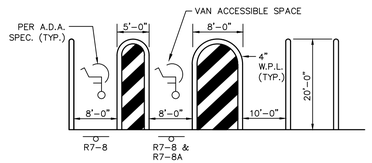

9/33 ADA SPACE STRIPING DETAIL

NOT TO SCALE

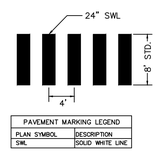

PAVEMENT MARKING LEGEND	
PLAN SYMBOL	DESCRIPTION
SWL	SOLID WHITE LINE

10/33 PEDESTRIAN CROSSWALK

NOT TO SCALE

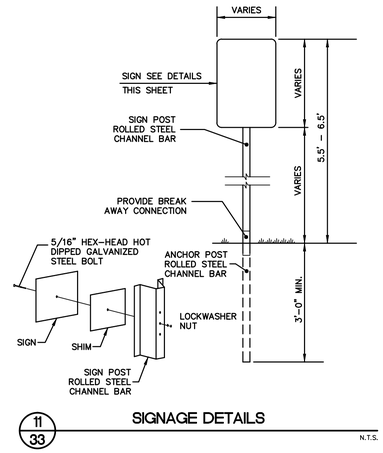

11/33 SIGNAGE DETAILS

N.T.S.

HIBBELN ENGINEERING COMPANY, L.L.C.
CONSULTING ENGINEERS
215-619-9070 PA, NJ, MD & DE
593 Skippack Pike, Suite 300
Blue Bell, Pennsylvania 19422
www.hibbelnengineering.com
IN CONJUNCTION WITH:
LandConcepts
593 Skippack Pike • Suite 300 • Blue Bell, PA 19422

COOK TRACT ATHLETIC FIELDS

PREPARED FOR

WHITPAIN TOWNSHIP

SITE SITUATE IN

WHITPAIN TOWNSHIP
MONTGOMERY COUNTY, PENNSYLVANIA

© COPYRIGHT HIBBELN ENGINEERING COMPANY, L.L.C. THE ARCHITECTURAL WORK AND DESIGN CONTAINED IN THESE PLANS, INCLUDING BUT NOT LIMITED TO ALL SPECIFICATIONS, DRAWINGS, AND CAD FILES, IS THE PROPERTY OF HIBBELN ENGINEERING COMPANY, L.L.C. AND IS PROTECTED BY COPYRIGHT LAWS. ALL RIGHTS RESERVED. USE OF THESE PLANS FOR ANY PROJECT OTHER THAN THE ONE FOR WHICH THEY WERE PREPARED, WITHOUT THE EXPRESS WRITTEN PERMISSION OF HIBBELN ENGINEERING COMPANY, L.L.C. IS PROHIBITED. ANY UNAUTHORIZED USE SHALL BE AT THE USER'S SOLE RISK AND WITHOUT LIABILITY TO HIBBELN ENGINEERING COMPANY, L.L.C. FROM THE USER AND ANY PARTY TO WHOM THE USER TRANSFERS THESE PLANS.

NO.	REVISIONS	DATE
1	100% COMPLETION PLAN	AUGUST 26, 2011
2	PER MCCD	NOVEMBER 22, 2011
3	PER MCCD LETTER (12/27/12)	JANUARY 8, 2012
4	PER STORM SYSTEM 'B'	JANUARY 31, 2012
5	PER MCCD LETTER (2-9-12)	FEBRUARY 10, 2012
6	PER ADDITION OF SEDIMENT BASIN 6 PHASE 4 PLAN	JUNE 18, 2012

HIBBELN ENGINEERING COMPANY, L.L.C.
CONSULTING ENGINEERS

CONSTRUCTION DETAILS PLAN 'B'

COOK TRACT
ATHLETIC FIELDS
SITE SITUATE IN
WHITPAIN TOWNSHIP
MONTGOMERY COUNTY, PENNSYLVANIA

PROJECT MANAGER: DSC/AJH	DRAFTED BY: MLW
PROJECT NUMBER: 12460	DRAWING FILE: #12460_SHT29-37
PLAN SCALE: N.T.S.	PLAN SHEET NUMBER 33 OF 38

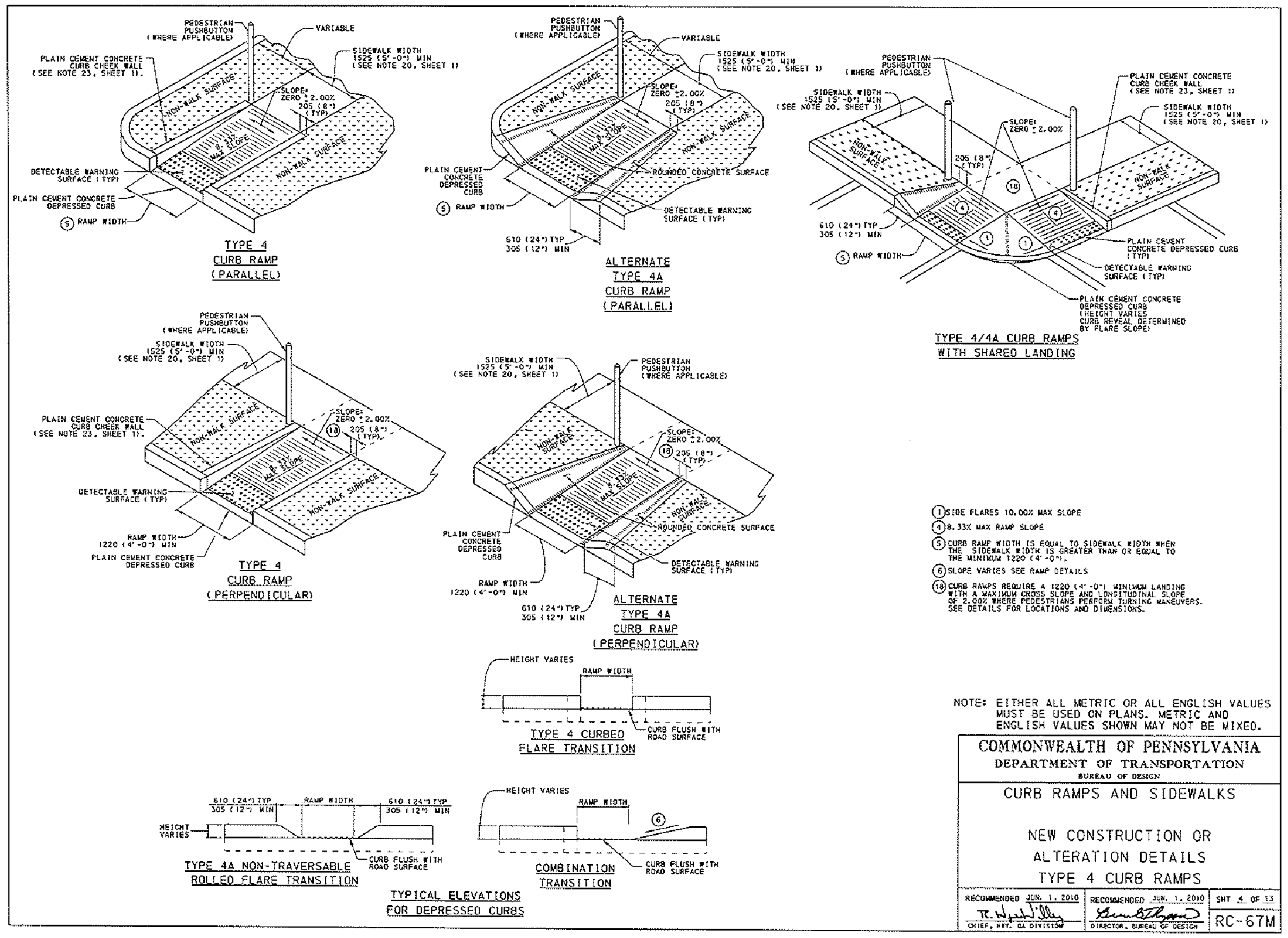

1/34 ADA CURB RAMPS

NOT TO SCALE

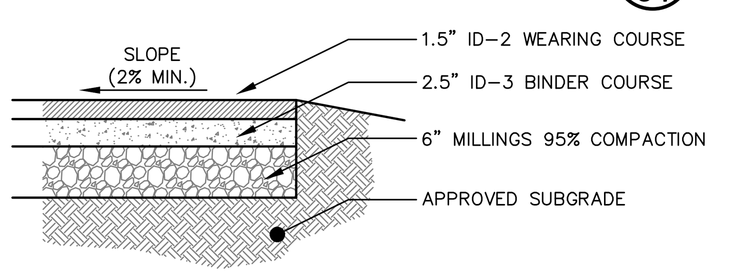

NOTES:
1.) SUBBASE SHALL BE TIGHT AND DRY AND SHALL NOT BE SOFT OR SPONGY UNDER THE ROLLER. THE SUBBASE COMPACTED THICKNESS SHALL NOT BE LESS THAN 6".
2.) ALL EDGES OF WEARING COURSE AT CURB AND/OR STRUCTURES, RIMS, VALVES, ETC. AND THE EDGE BETWEEN THE EXISTING AND PROPOSED PAVING SHALL BE SEALED WITH AC-20 ASPHALT CEMENT, 12 INCHES WIDE.

2/34 DRIVE 'A'
PAVING SECTION DETAIL

NOT TO SCALE

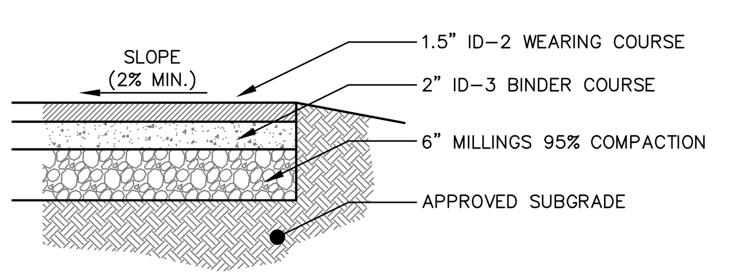

NOTES:
1.) SUBBASE SHALL BE TIGHT AND DRY AND SHALL NOT BE SOFT OR SPONGY UNDER THE ROLLER. THE SUBBASE COMPACTED THICKNESS SHALL NOT BE LESS THAN 6".
2.) ALL EDGES OF WEARING COURSE AT CURB AND/OR STRUCTURES, RIMS, VALVES, ETC. AND THE EDGE BETWEEN THE EXISTING AND PROPOSED PAVING SHALL BE SEALED WITH AC-20 ASPHALT CEMENT, 12 INCHES WIDE.

3/34 DRIVE 'B'
PAVING SECTION DETAIL

NOT TO SCALE

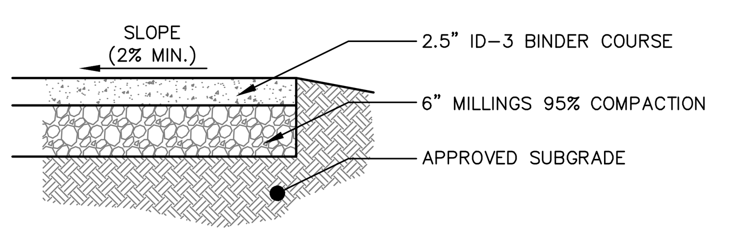

NOTES:
1.) SUBBASE SHALL BE TIGHT AND DRY AND SHALL NOT BE SOFT OR SPONGY UNDER THE ROLLER. THE SUBBASE COMPACTED THICKNESS SHALL NOT BE LESS THAN 6".
2.) ALL EDGES OF BINDER COURSE AT CURB AND/OR STRUCTURES, RIMS, VALVES, ETC. AND THE EDGE BETWEEN THE EXISTING AND PROPOSED PAVING SHALL BE SEALED WITH AC-20 ASPHALT CEMENT, 12 INCHES WIDE.

4/34 PARKING LOT
PAVING SECTION DETAIL

NOT TO SCALE

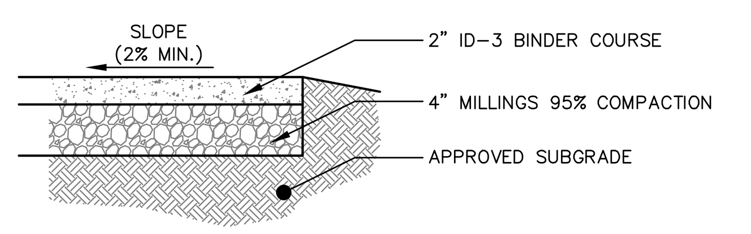

NOTES:
1.) SUBBASE SHALL BE TIGHT AND DRY AND SHALL NOT BE SOFT OR SPONGY UNDER THE ROLLER. THE SUBBASE COMPACTED THICKNESS SHALL NOT BE LESS THAN 6".
2.) ALL EDGES OF BINDER COURSE AT CURB AND/OR STRUCTURES, RIMS, VALVES, ETC. AND THE EDGE BETWEEN THE EXISTING AND PROPOSED PAVING SHALL BE SEALED WITH AC-20 ASPHALT CEMENT, 12 INCHES WIDE.

5/34 BITUMINOUS TRAIL
SECTION DETAIL

NOT TO SCALE

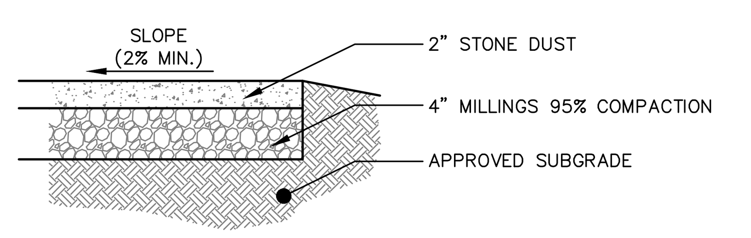

NOTES:
1.) SUBBASE SHALL BE TIGHT AND DRY AND SHALL NOT BE SOFT OR SPONGY UNDER THE ROLLER. THE SUBBASE COMPACTED THICKNESS SHALL NOT BE LESS THAN 6".
2.) ALL EDGES OF BINDER COURSE AT CURB AND/OR STRUCTURES, RIMS, VALVES, ETC. AND THE EDGE BETWEEN THE EXISTING AND PROPOSED PAVING SHALL BE SEALED WITH AC-20 ASPHALT CEMENT, 12 INCHES WIDE.

6/34 STONE DUST TRAIL
SECTION DETAIL

NOT TO SCALE

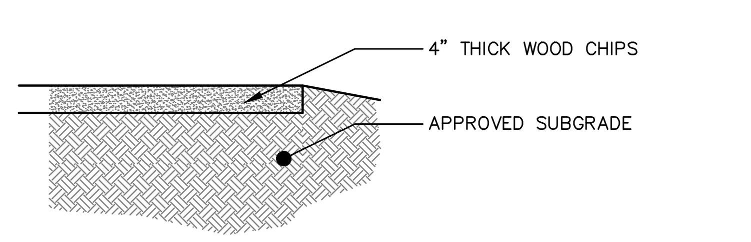

7/34 WOOD CHIP TRAIL
DETAIL
(NOT IN CONTRACT)

NOT TO SCALE

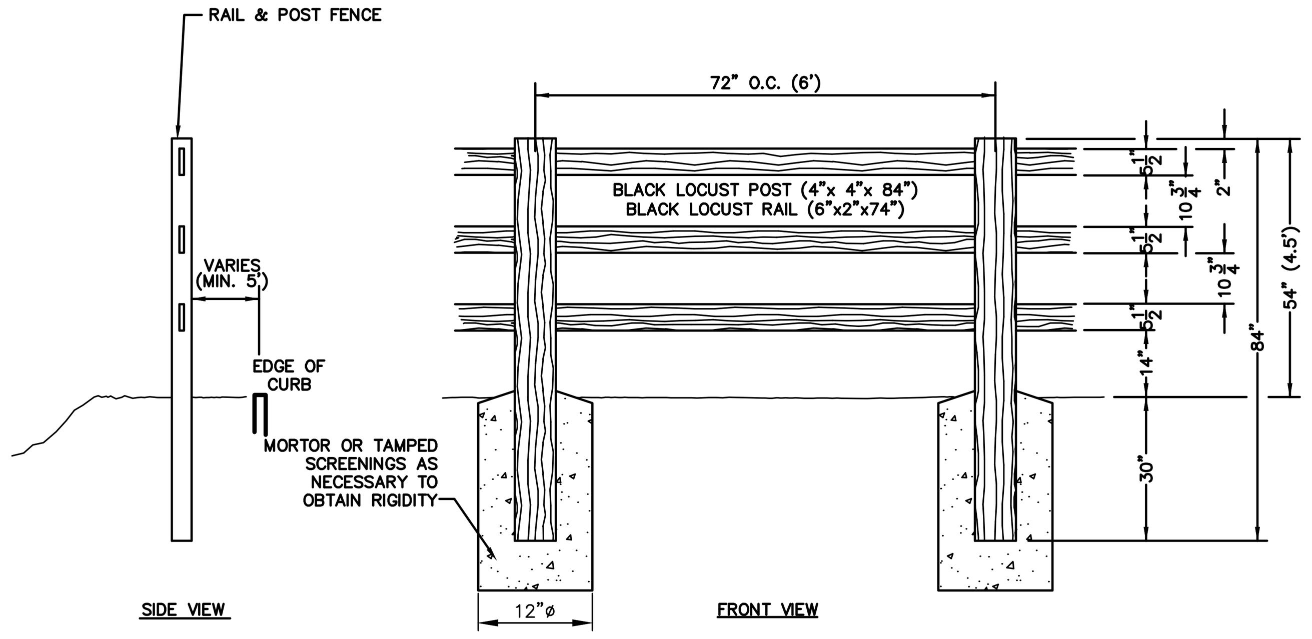

SHOP DRAWINGS SHALL BE SUBMITTED BY CONTRACTOR FOR OWNER REVIEW AND APPROVAL PRIOR TO CONTRACTOR PURCHASE/DELIVERY AND/OR INSTALLATION

8/34 SPLIT RAIL FENCE DETAIL

NOT TO SCALE

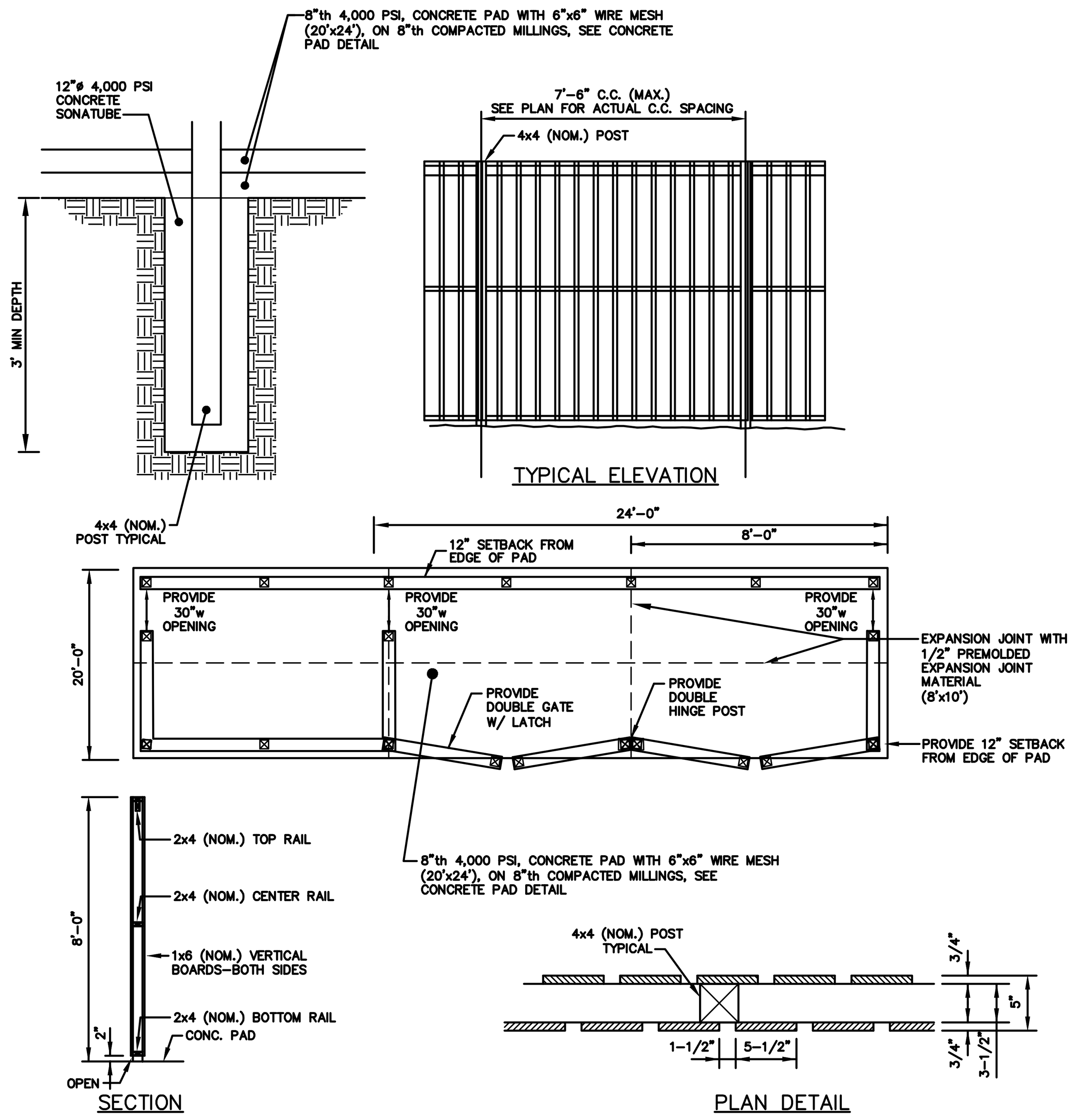

NOTE: FENCE FACE BOARDS SHALL BE CLEAR CEDAR. FRAME AND POSTS SHALL BE PRESSURE TREATED, WOLMANIZED LUMBER OR APPROVED EQUAL. PROVIDE TWO 5' GATES W/ LATCH AND HANDLES AT FRONT OF ENCLOSURE.

9/34 TRASH AND RECYCLABLES
ENCLOSURE DETAIL

NOT TO SCALE

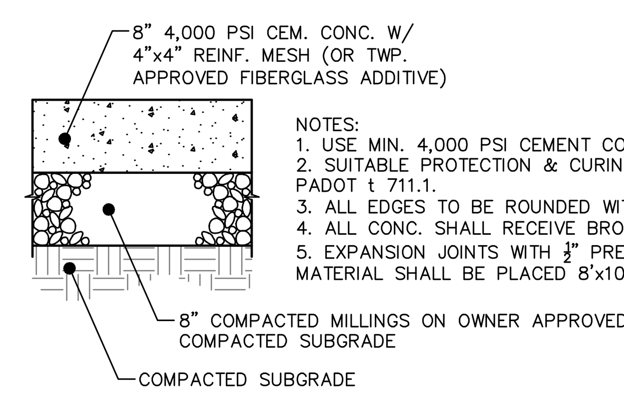

NOTES:
1. USE MIN. 4,000 PSI CEMENT CONCRETE.
2. SUITABLE PROTECTION & CURING SHALL BE PER PADOT t 711.1.
3. ALL EDGES TO BE ROUNDED WITH A 1/4" TOOL.
4. ALL CONC. SHALL RECEIVE BROOM FINISH.
5. EXPANSION JOINTS WITH ½" PRE-MOLDED MATERIAL SHALL BE PLACED 8'x10' BLOCKS.

10/34 CONCRETE PAD DETAIL

NOT TO SCALE

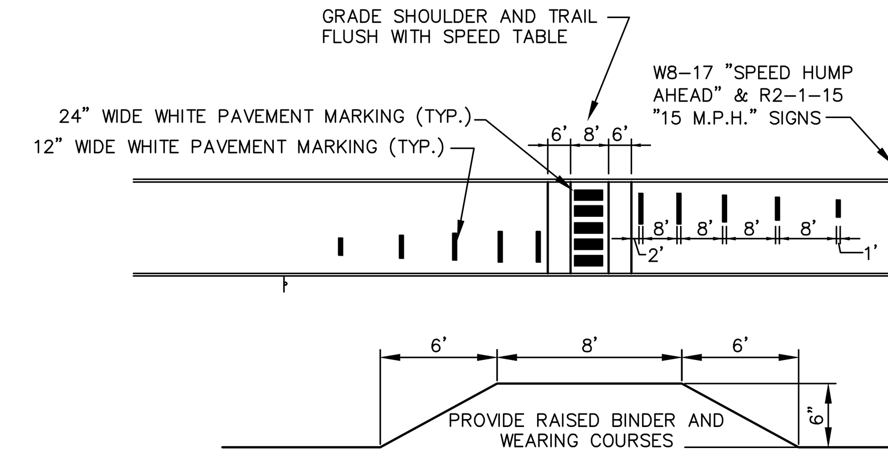

NOTES:
1. HEIGHT OF SPEED TABLE AT CENTER SECTION IS 6".
2. PROVIDE POSITIVE DRAINAGE ON ALL SIDES TO PREVENT PONDING

11/34 SPEED TABLE DETAIL

NOT TO SCALE

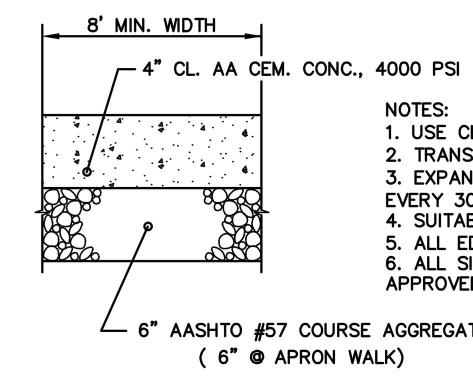

NOTES:
1. USE CLASS AA CEMENT CONCRETE. (MIN. 4,000 PSI)
2. TRANSVERSE CONTROL JOINTS TO BE FORMED EVERY 4'.
3. EXPANSION JOINTS WITH 1/2" PRE-MOLDED MATERIAL SHALL BE PLACED EVERY 30' FEET.
4. SUITABLE PROTECTION & CURING SHALL BE PER PADOT t 711.1.
5. ALL EDGES TO BE ROUNDED WITH A 1/4" TOOL.
6. ALL SIDEWALK SHALL RECEIVE BROOM FINISH UNLESS OTHERWISE APPROVED BY TWP.

ADDITIONAL EXPANSION MATERIALS SHALL BE PLACED BETWEEN ANY CURB AND DRIVEWAY APRONS AND IN THE SIDEWALK AT THE DRIVEWAY LIMITS.

12/34 CROSS SECTION
CONCRETE SIDEWALK

N.T.S.

HIBBELN ENGINEERING COMPANY, L.L.C.
CONSULTING ENGINEERS
215·619·9070 PA, NJ, MD & DE
593 Skippack Pike, Suite 300
Blue Bell, Pennsylvania 19422
www.hibbelnengineering.com
IN CONJUNCTION WITH:
LandConcepts
593 Skippack Pike • Suite 300 • Blue Bell, PA 19422

COOK TRACT ATHLETIC FIELDS

PREPARED FOR
WHITPAIN TOWNSHIP
SITE SITUATE IN
WHITPAIN TOWNSHIP
MONTGOMERY COUNTY, PENNSYLVANIA

ALL DOCUMENTS PREPARED BY HIBBELN ENGINEERING COMPANY, L.L.C. ARE INSTRUMENTS OF SERVICE IN RESPECT OF THE PROJECT. THEY ARE NOT INTENDED OR REPRESENTED TO BE SUITABLE FOR REUSE BY OWNER OR OTHERS ON EXTENSIONS OF THE PROJECT OR ON ANY OTHER PROJECT. ANY REUSE WITHOUT WRITTEN VERIFICATION OR ADAPTATION BY HIBBELN ENGINEERING COMPANY, L.L.C. FOR THE SPECIFIC PURPOSE INTENDED WILL BE AT OWNERS SOLE RISK AND WITHOUT LIABILITY OR LEGAL EXPOSURE TO HIBBELN ENGINEERING COMPANY, L.L.C.; AND OWNER SHALL INDEMNIFY AND HOLD HARMLESS HIBBELN ENGINEERING COMPANY, L.L.C. FROM ALL CLAIMS, DAMAGES, LOSSES AND EXPENSES ARISING OUT OF OR RESULTING THEREFROM.

NO.	REVISIONS	
6	PER ADDITION OF SEDIMENT BASIN B PHASE 4 PLAN	JUNE 18, 2012
5	PER MCCD LETTER (2-9-12)	FEBRUARY 10, 2012
4	PER STORM SYTEM 'B'	JANUARY 31, 2012
3	PER MCCD LETTER (1/3/12)	JANUARY 5, 2012
2	PER SANITARY SEWER RELOCATION	DECEMBER 19, 2011
1	100% COMPLETION PLAN	NOVEMBER 22, 2011
	PLAN ORIGINATION DATE	AUGUST 26, 2011

HIBBELN ENGINEERING COMPANY, L.L.C. CONSULTING ENGINEERS

CONSTRUCTION DETAILS PLAN 'C'

COOK TRACT ATHLETIC FIELDS
SITE SITUATE IN
WHITPAIN TOWNSHIP
MONTGOMERY COUNTY, PENNSYLVANIA

PROJECT MANAGER: DSC/AJH	DRAFTED BY: MLW
PROJECT NUMBER: 12460	DRAWING FILE: #12460_SHT29-37
PLAN SCALE: N.T.S.	PLAN SHEET NUMBER 34 OF 38

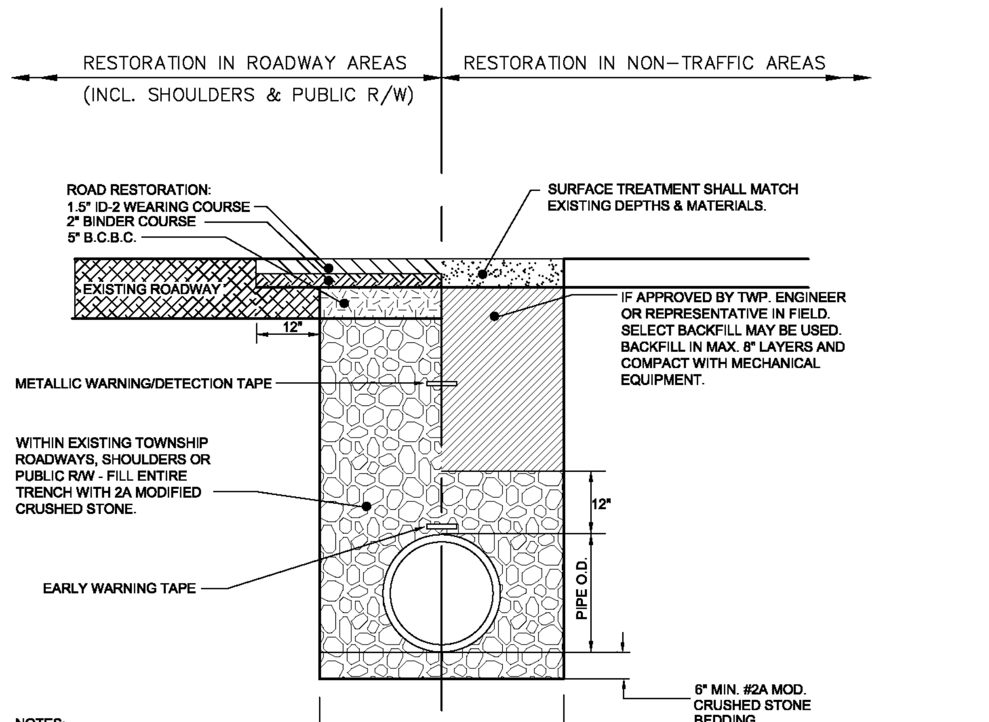

NOTES:

1. METALLIC WARNING/DETECTION TAPE:
   A. TWO (2) INCHES WIDE METALLIC LINED.
   B. TAPE SHALL BE GREEN IN COLOR WITH "CAUTION BURIED SEWER LINE BELOW" ON IT.
   C. TAPE IS TO BE PLACED APPROXIMATELY 1 FT. BELOW SUBGRADE.
   D. TAPE SHALL BE SET AT ALL MAINS AND LATERALS.
2. EARLY WARNING TAPE:
   A. 3" WIDE POLYETHYLENE "CAUTION BURIED SEWER LINE BELOW" STENCILED EVERY TWO (2) FEET.

SANITARY SEWER BACKFILL DETAIL

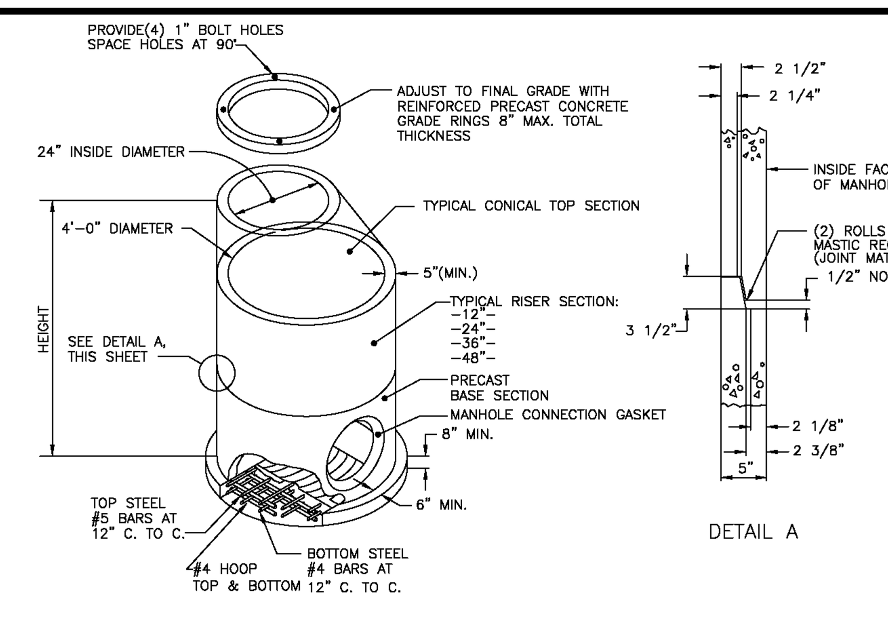

NOTES

1) CONSTRUCT IN ACCORDANCE WITH PENNDOT PUBLICATION 408 CURRENT EDITION SECTION 714; AND ASTM C-478M-90. STANDARD SPECIFICATION FOR PRECAST REINFORCED CONCRETE MANHOLE SECTIONS AS MODIFIED HEREIN.
2) MINIMUM CONCRETE COMPRESSIVE STRENGTH:
   CAST IN PLACE 4000 PSI
   PRECAST 4000 PSI
3) PROVIDE STEEL REINFORCEMENT IN ACCORDANCE WITH ASTM A-185.
4) MANHOLE COATINGS: EXTERIOR COATING; COOPER BLACK NO. 760 TOP SERVICE BLACK AS MANUFACTURED BY COOPERS CREEK CHEMICAL CORP.OR APPROVED EQUAL. AT LEAST THREE (3) COATS SHALL BE APPLIED GIVING A TOTAL DRY FILM THICKNESS OF A MINIMUM 32.0 MILS. INTERIOR COATING: PENNSBURY 54-W-23 WHITE PONAMID MANHOLE COATING. AT LEAST TWO (2) COATS SHALL BE APPLIED GIVING A TOTAL DRY THICKNESS OF A MINIMUM 10-14 MILS.
5) FLOW CHANNEL TO BE PRECAST INTO MANHOLE BASE.
6) MANHOLE CONNECTION GASKETS: ECONOSEAL AS MANUFACTURED BY PRESS SEAL GASKET CORP. (SPEC. ASTM C-923) OR APPROVED EQUAL.
7) MANHOLES SHALL BE CONSTRUCTED WITH STEPS. REFER TO WHITPAIN TOWNSHIP DETAIL #15 FOR SPEC. OF STEPS.
8) WATERSAVING DISH TO BE INSTALLED BENEATH MH COVER.

PRECAST SANITARY MANHOLE

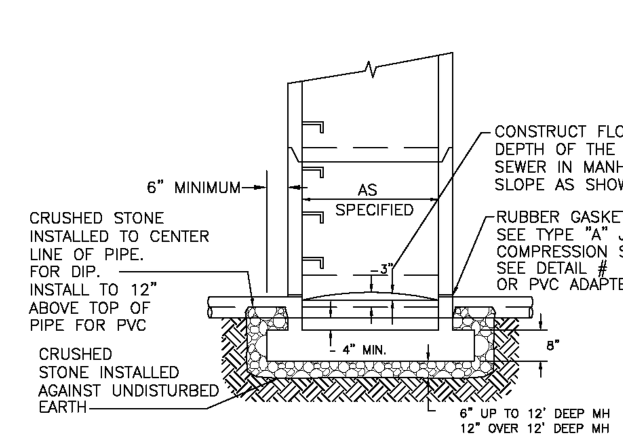

NOTES:

1) CONSTRUCT IN ACCORDANCE WITH PENNDOT PUBLICATION 408 CURRENT EDITION SECTION 714. AND ASTM C-478M-90. AND PENNDOT RC STANDARDS CURRENT EDITION.
2) MINIMUM STRENGTH OF CONCRETE
   CAST-IN-PLACE 4000 PSI(MIN.)
   PRECAST 4000 PSI(MIN.)
3) PROVIDE STEEL REINFORCEMENT MEETING THE REQUIREMENTS OF PENNDOT PUBLICATION 408 CURRENT EDITION SEC. 709. REINFORCE PER PENNDOT 408 CURRENT EDITION AND RC STANDARD RC-39M SHEETS 1 THROUGH 5.

PRECAST MANHOLE BASE

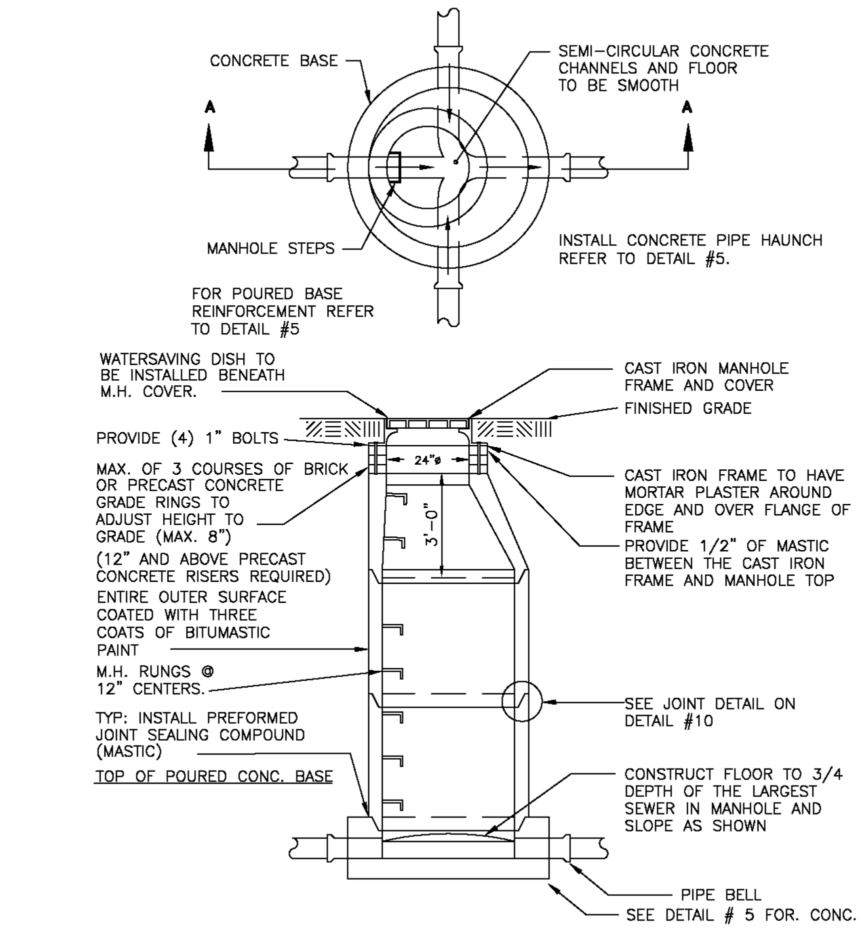

NOTE:
1. STEEL TEMPLATE TO BE SUPPLIED BY MANHOLE MFR. IN ORDER TO FORM PROPER RECESS IN CONCRETE.
2. RISER TO BE MULTIPLE LENGTHS OF 1'-0", IN ORDER TO SUIT VARIATIONS IN ELEVATION.

PRECAST MANHOLE WITH POURED CONCRETE BASE

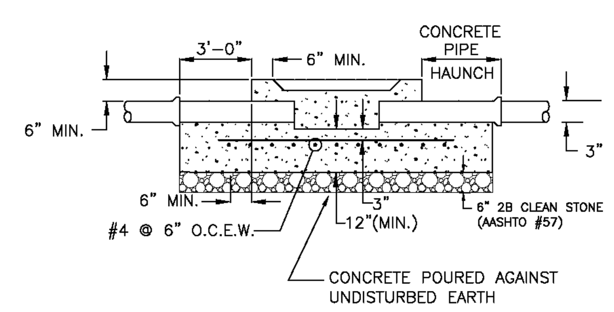

REINFORCEMENT FOR POURED CONCRETE BASE

NOTES:
1) IN LIEU OF BELLS, PROVIDE MECH. JOINTS FOR DROP ASSEMBLY WHERE D.I. PIPE IS SPECIFIED.
2) FOR POURED BASE REINFORCEMENT REFER TO DETAIL #5.

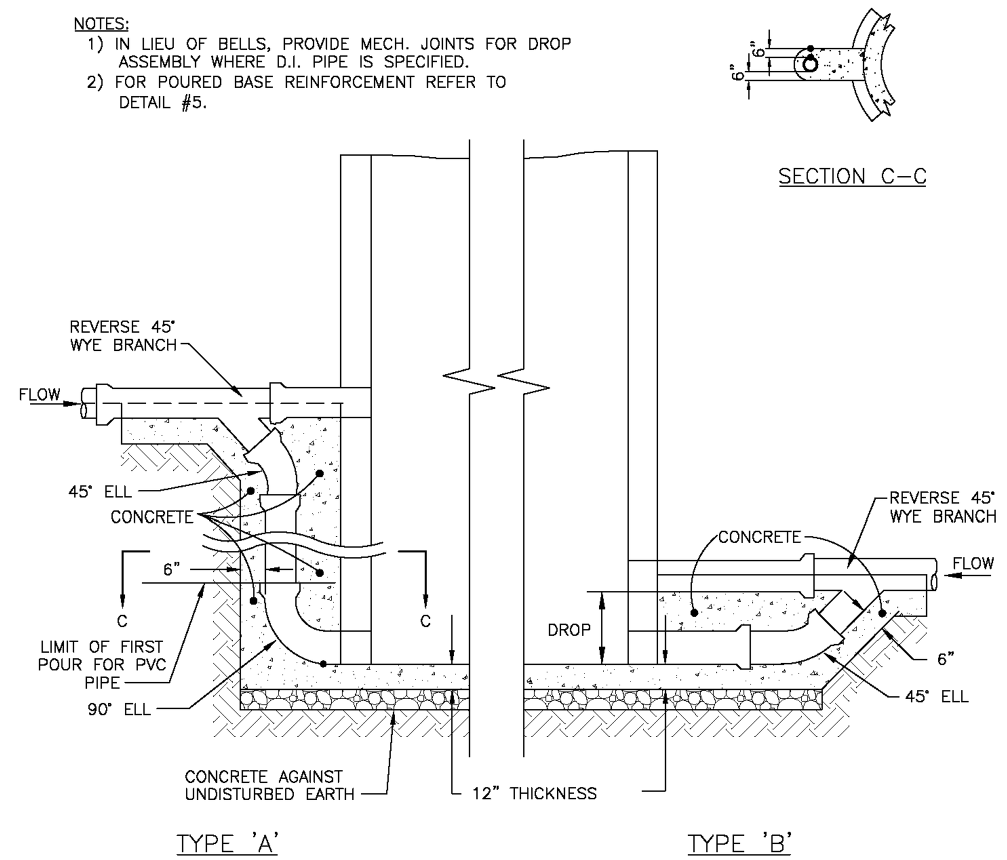

OPTION: ATLANTIC CONCRETE PRE-CAST DROP ASSEMBLIES MAY BE USED.

TYPE B DROP MAX. DROP
8" SEWER 3'-6"
10" SEWER 3'-9"
12" SEWER 4'-6"
15" SEWER 4'-6"

DROP MANHOLE

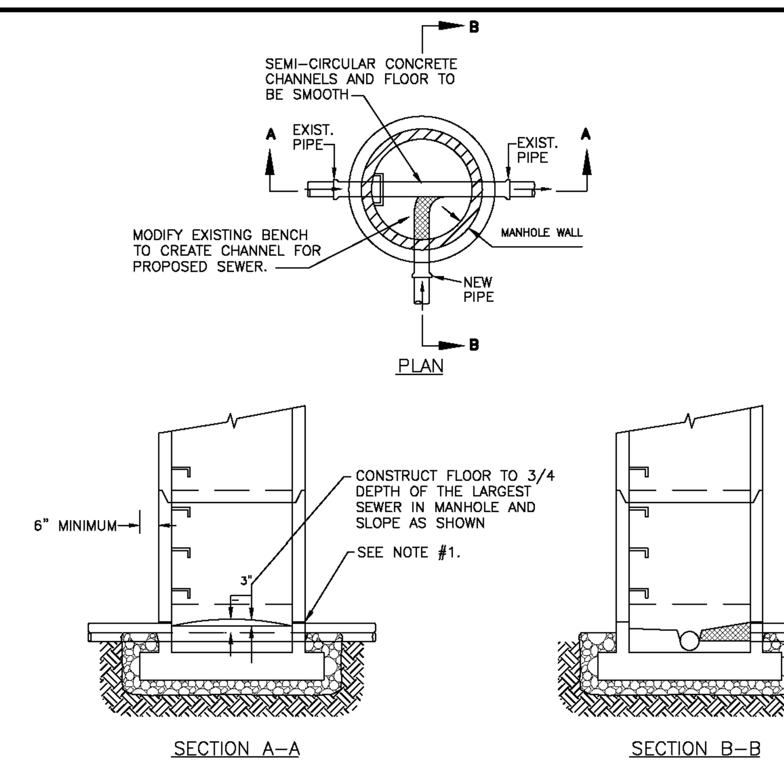

NOTES:
1) CORE DRILL HOLE INTO EXISTING MANHOLE WALL.
2) IF PVC OR D.I.P., INSTALL PSX: POSITIVE SEAL (PRESS-SEAL GASKET CORP.) OR APPROVED EQUAL.
3) RESHAPE AND OR RECONSTRUCT EXISTING CHANNEL FOR NEW FLOW PATTERN.
4) CUT OPENING IN EXISTING MANHOLE WALL EQUAL TO PROPOSED SANITARY SEWER O.D. PLUS 2" A WATERSTOP (FERNCO OR APPROVED EQUAL) SHALL BE PLACED AROUND THE PROPOSED SEWER CENTERED IN THE MANHOLE WALL AND EMBEDDED IN NON SHRINK GROUT WHICH SHALL BE USED TO SEAL THE ANNULAR OPENING.

CONNECTION TO EXISTING MANHOLE

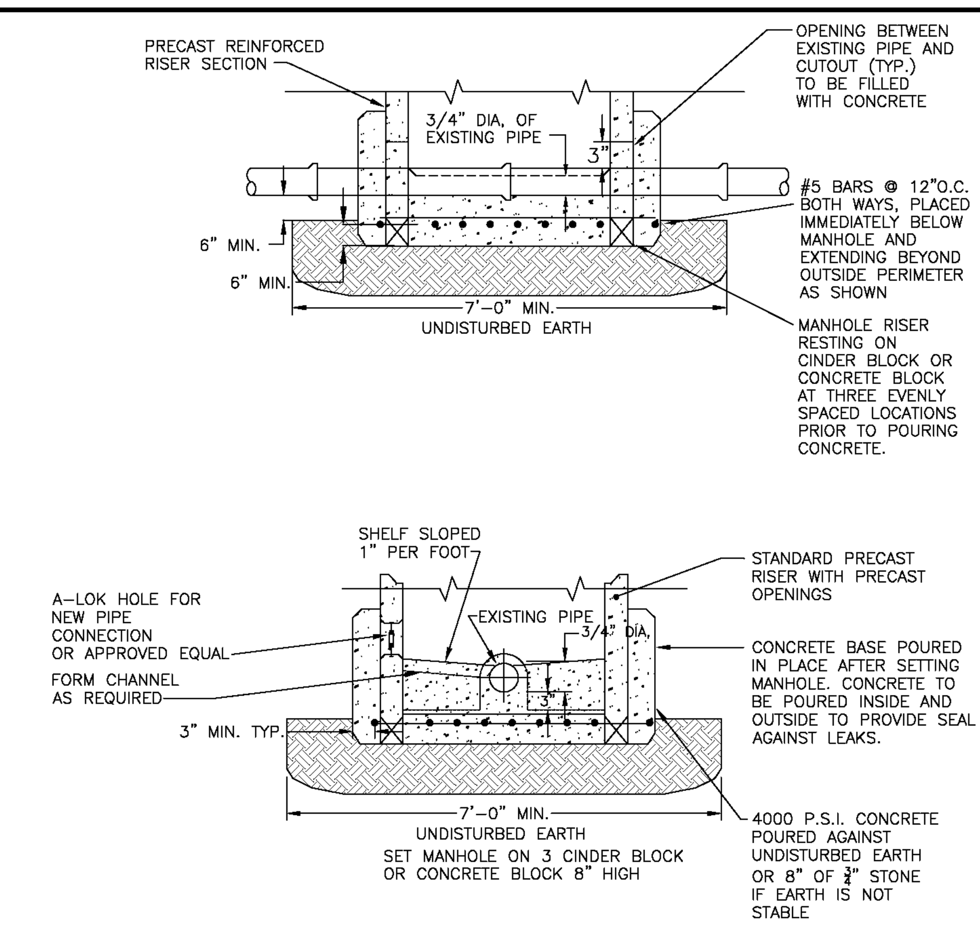

NOTE:
1. EXISTING PIPE TO REMAIN UNTIL SATISFACTORY COMPLETION OF MANHOLE TESTING
2. REMOVE CROWN OF EXISTING PIPE FLUSH WITH CONCRETE SHELF.

DOGHOUSE MANHOLE DETAIL

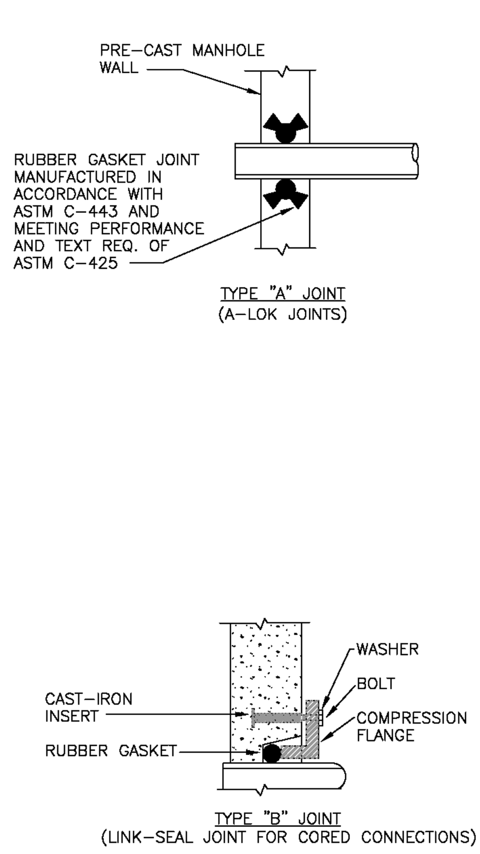

JOINT DETAILS

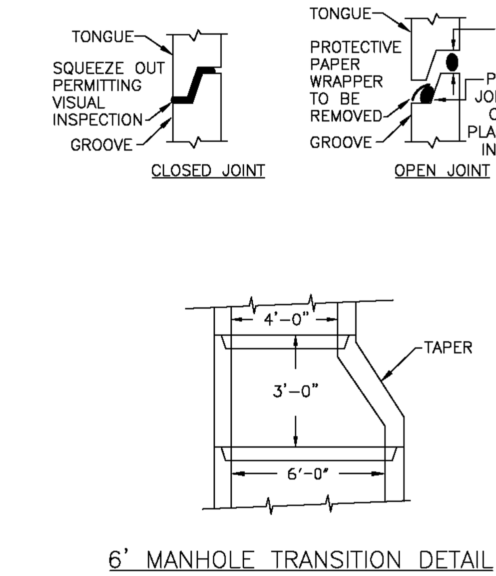

6' MANHOLE TRANSITION DETAIL

NOTE:
1) RISER AND CONE SECTIONS TO BE ADEQUATELY REINFORCED IN ACCORDANCE WITH ASTM SPECIFICATION C-478M-90.

PRE-CAST MANHOLE JOINTS AND TRANSITION DETAILS

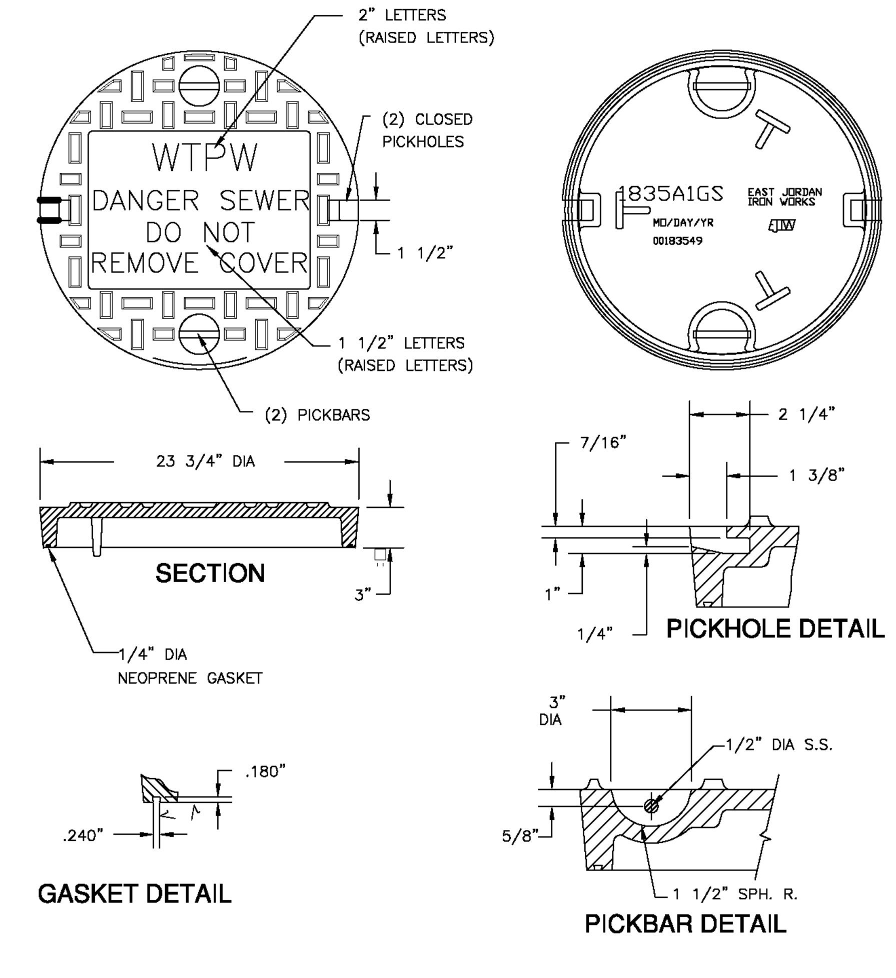

EAST JORDAN IRON WORKS PRODUCT NO 00183549

24" CAST IRON MANHOLE COVER

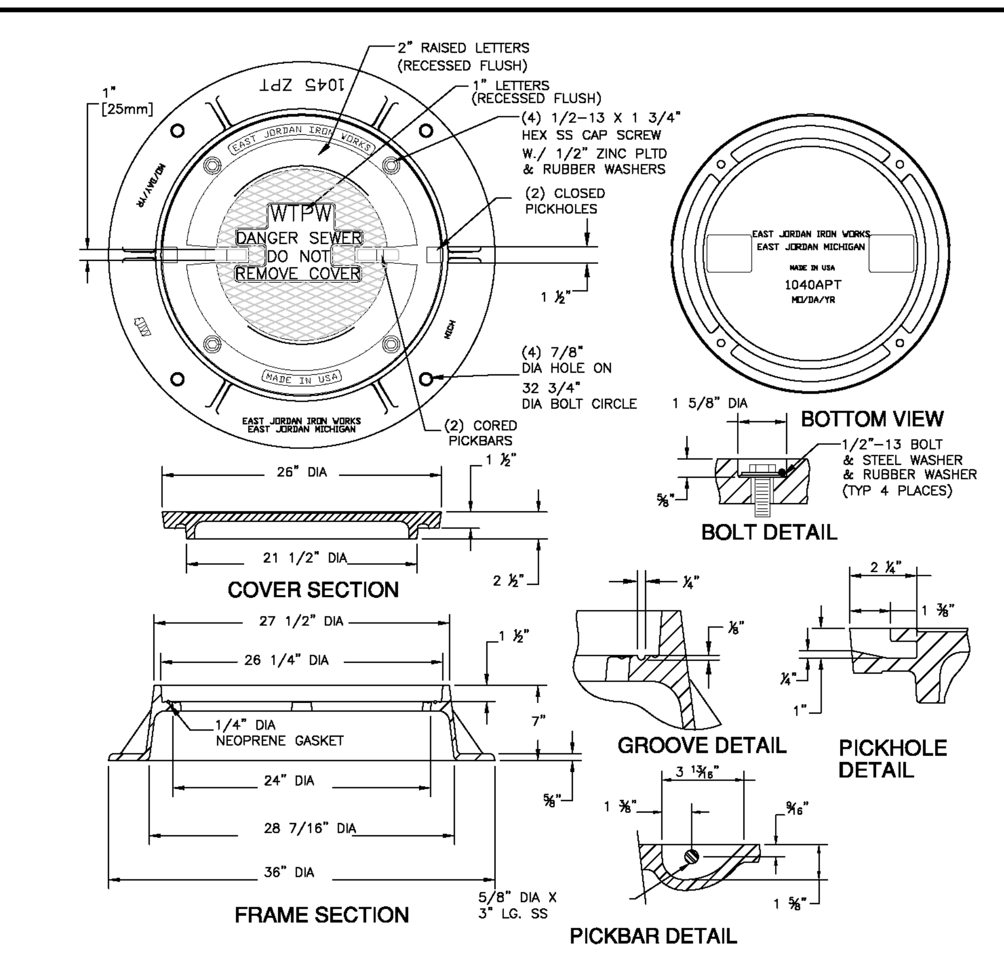

√ MACHINED SURFACE

CAST IRON WATERTIGHT MANHOLE FRAME AND COVER

1 OF 3/ 24x36.dwg/ 07-28-06/ MF

HIBBELN ENGINEERING COMPANY, L.L.C.
CONSULTING ENGINEERS
215·619·9070 PA, NJ, MD & DE
593 Skippack Pike, Suite 300
Blue Bell, Pennsylvania 19422
www.hibbelnengineering.com

IN CONJUNCTION WITH:

LandConcepts
593 Skippack Pike • Suite 300 • Blue Bell, PA 19422

COOK TRACT ATHLETIC FIELDS

PREPARED FOR

WHITPAIN TOWNSHIP

SITE SITUATE IN

WHITPAIN TOWNSHIP
MONTGOMERY COUNTY, PENNSYLVANIA

ALL DOCUMENTS PREPARED BY HIBBELN ENGINEERING COMPANY, L.L.C. ARE INSTRUMENTS OF SERVICE IN RESPECT OF THE PROJECT. THEY ARE NOT INTENDED OR REPRESENTED TO BE SUITABLE FOR REUSE BY OWNER OR OTHERS OR EXTENSIONS OF THE PROJECT OR ON ANY OTHER PROJECT. ANY REUSE WITHOUT WRITTEN VERIFICATION OR ADAPTATION BY HIBBELN ENGINEERING COMPANY, L.L.C. FOR THE SPECIFIC PURPOSE INTENDED WILL BE AT OWNERS SOLE RISK AND WITHOUT LIABILITY OR LEGAL EXPOSURE TO HIBBELN ENGINEERING COMPANY, L.L.C.; AND OWNER SHALL INDEMNIFY AND HOLD HARMLESS HIBBELN ENGINEERING COMPANY, L.L.C. FROM ALL CLAIMS, DAMAGES, LOSSES AND EXPENSES ARISING OUT OF OR RESULTING THEREFROM.

NO.	REVISIONS	
6	PER ADDITION OF SEDIMENT BASIN B PHASE 4 PLAN	JUNE 18, 2012
5	PER MCCD LETTER (2-9-12)	FEBRUARY 10, 2012
4	PER STORM SYTEM 'B'	JANUARY 31, 2012
3	PER MCCD LETTER (1/3/12)	JANUARY 5, 2012
2	PER SANITARY SEWER RELOCATION	DECEMBER 19, 2011
1	100% COMPLETION PLAN	NOVEMBER 22, 2011
	PLAN ORIGINATION DATE	AUGUST 26, 2011

HIBBELN ENGINEERING COMPANY, L.L.C.
CONSULTING ENGINEERS

SANITARY SEWER DETAILS PLAN 'A'

COOK TRACT ATHLETIC FIELDS
SITE SITUATE IN
WHITPAIN TOWNSHIP
MONTGOMERY COUNTY, PENNSYLVANIA

PROJECT MANAGER:	DRAFTED BY:
DSC/AJH	MLW
PROJECT NUMBER:	DRAWING FILE:
12460	#12460_SHT29-37
PLAN SCALE:	PLAN SHEET NUMBER
N.T.S.	35 OF 38

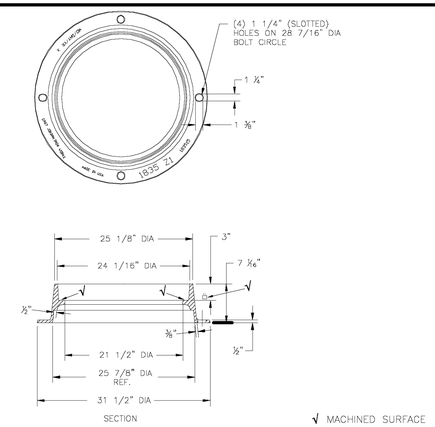

EAST JORDAN IRON WORKS PRODUCT NO 00183515

MANHOLE FRAME

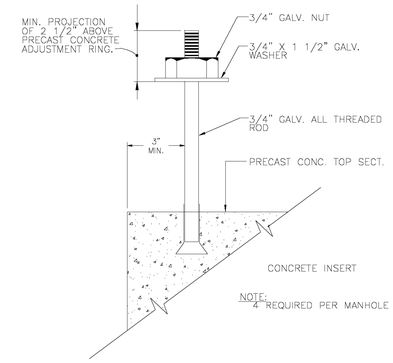

ANCHOR BOLT DETAIL

ALCOA No. 20100

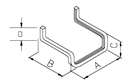

CAST IN PLACE WALLS

ALCOA No. 16027B INSTALL W/ PLASTIC INSERTS

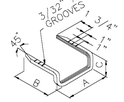

PRECAST MANHOLES

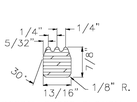

TYPICAL CROSS SECTION ON ALL STEPS

APPLICATION	DIMENSION (IN)			
	A	B	C	D
CAST IN PLACE WALLS	17-3/4	13-13/16	3-3/4	2
PRECAST M.H.	13-3/4	11	3-3/4	–

*MIN. 12" AND MUST MEET THE REQUIREMENTS OF ASTM C-478 SPECIFICATIONS

DROP FRONT MANHOLE STEP

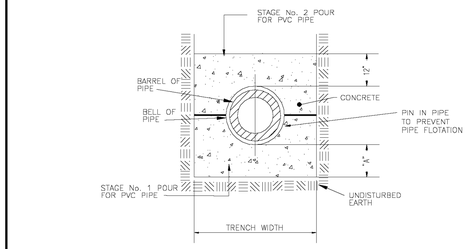

PIPE SIZE	A
4"-16"	6"
18"-48"	8"
54"-84"	10"

METHOD OF ENCASING P.V.C. PIPE IN CONCRETE

STAGE No. 1--INSTALL CONCRETE FROM BOTTOM OF TRENCH TO CENTERLINE OF PIPE.

STAGE No. 2--AFTER 24 HOUR PERIOD INSTALL CONCRETE FROM CENTERLINE OF PIPE TO 12" ABOVE BARREL OF PIPE.

CONCRETE ENCASEMENT DETAIL

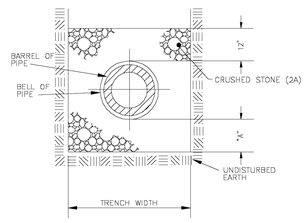

PIPE SIZE	A
4"-16"	6"
18"-48"	8"
54"-84"	10"

CRUSHED STONE ENCASEMENT

CLASS "B" CONCRETE

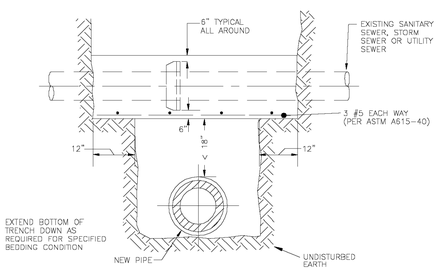

ENCASEMENT OF EXISTING PIPE

NOTES:
1. BACKFILL TO WITHIN 6" OF BELL
2. LEDGE 12" EACH SIDE OF TRENCH ON UNDISTURBED EARTH
3. UPON LEDGES AND BACKFILL POUR CONCRETE 6" ON OUTSIDE BELL PLACE REINFORCED STEEL AS SHOWN
4. COMPLETE BACKFILLING AFTER CONCRETE HAS SET AT LEAST 24 HR.

ENCASEMENT OF EXISTING PIPE

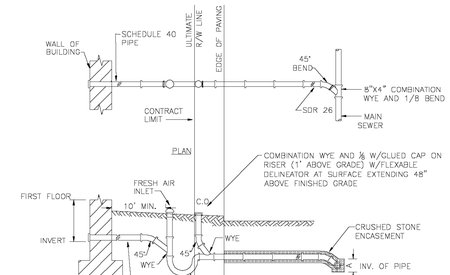

NOTES:
1. MINIMUM GRADE OF LATERAL = 1/4" IN 1'-0", EXCEPT AS APPROVED OTHERWISE BY TOWNSHIP.
2. 35" MINIMUM COVER.

TYPICAL HOUSE CONNECTION FIRST FLOOR SERVICE

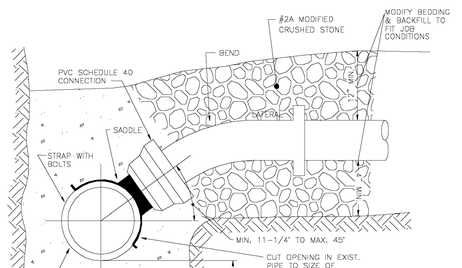

SADDLE CONNECTION (TIE-IN TO EXISTING SEWER)

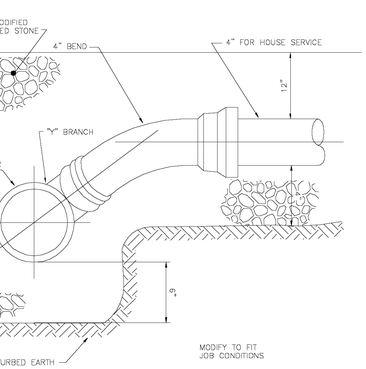

SUPPORT FOR "Y" BRANCH (NEW CONSTRUCTION)

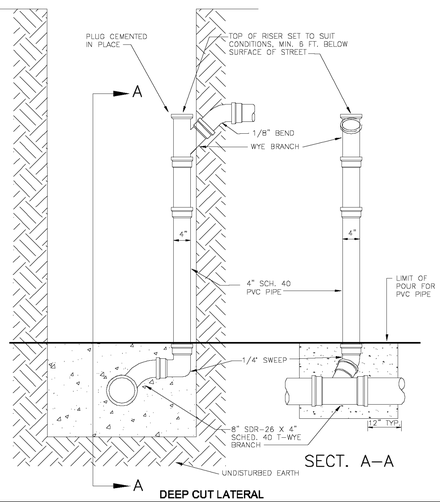

DEEP CUT LATERAL

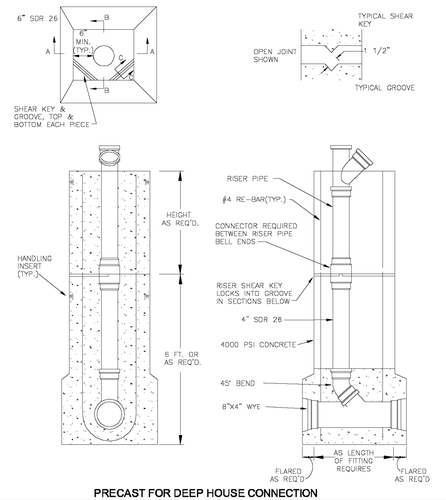

PRECAST FOR DEEP HOUSE CONNECTION

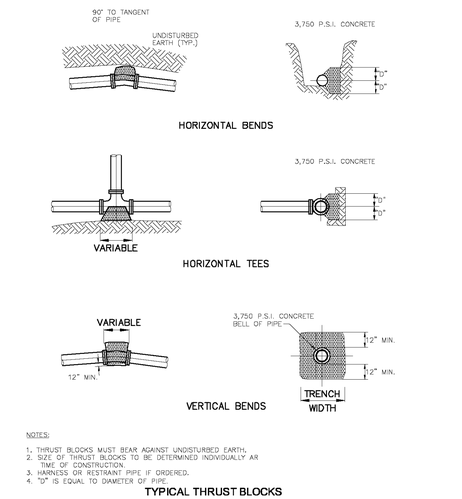

NOTES:
1. THRUST BLOCKS MUST BEAR AGAINST UNDISTURBED EARTH.
2. SIZE OF THRUST BLOCKS TO BE DETERMINED INDIVIDUALLY AR TIME OF CONSTRUCTION.
3. HARNESS OR RESTRAINT PIPE IF ORDERED.
4. "D" IS EQUAL TO DIAMETER OF PIPE.

TYPICAL THRUST BLOCKS

HIBBELN ENGINEERING COMPANY, L.L.C.
CONSULTING ENGINEERS
215-619-9070 PA, NJ, MD & DE
593 Skippack Pike, Suite 300
Blue Bell, Pennsylvania 19422
www.hibbelnengineering.com
IN CONJUNCTION WITH:
LandConcepts
593 Skippack Pike • Suite 300 • Blue Bell, PA 19422

COOK TRACT ATHLETIC FIELDS

PREPARED FOR

WHITPAIN TOWNSHIP

SITE SITUATE IN

WHITPAIN TOWNSHIP
MONTGOMERY COUNTY, PENNSYLVANIA

NO.	REVISIONS	PLAN ORIGINATION DATE
1	100% COMPLETION PLAN	AUGUST 26, 2011
2	PER MUNICIPALITY REVIEW	NOVEMBER 22, 2011
3	PER MUNICIPALITY REVIEW	JANUARY 9, 2012
4	PER STORM SYSTEM 'B'	JANUARY 31, 2012
5	PER MCCD LETTER (2-24-12)	FEBRUARY 10, 2012
6	PER ADDITION OF SEDIMENT BASIN 6 PHASE 4 PLAN	JUNE 18, 2012

© COPYRIGHT HIBBELN ENGINEERING COMPANY, L.L.C. ALL RIGHTS RESERVED. THIS PLAN IS THE PROPERTY OF HIBBELN ENGINEERING COMPANY, L.L.C. AND IS NOT TO BE USED IN WHOLE OR IN PART FOR ANY PURPOSE OTHER THAN THE SPECIFIC PROJECT FOR WHICH IT WAS PREPARED. ANY REUSE WITHOUT THE WRITTEN PERMISSION OF HIBBELN ENGINEERING COMPANY, L.L.C. FOR THE SPECIFIED PROJECT SHALL BE AT THE USER'S SOLE RISK AND WITHOUT LIABILITY TO HIBBELN ENGINEERING COMPANY, L.L.C. AND THE USER SHALL INDEMNIFY AND HOLD HARMLESS HIBBELN ENGINEERING COMPANY, L.L.C. FROM ALL CLAIMS, DAMAGES, LOSSES AND EXPENSES ARISING OUT OF OR RESULTING THEREFROM.

HIBBELN ENGINEERING COMPANY, L.L.C.
CONSULTING ENGINEERS

SANITARY SEWER DETAILS PLAN 'B'

COOK TRACT ATHLETIC FIELDS
SITE SITUATE IN
WHITPAIN TOWNSHIP
MONTGOMERY COUNTY, PENNSYLVANIA

PROJECT MANAGER:	DRAFTED BY:
DSC/AJH	MLW
PROJECT NUMBER:	DRAWING FILE:
12460	#12460_SHT29-37
PLAN SCALE:	PLAN SHEET NUMBER
N.T.S.	36 OF 38

PLOT BY: Mark Wentzel 11/30/06

INSERTA TEE SPECIFICATIONS

SDR35 GASKETED BELL GRAVITY APPLICATIONS

A. Bell end accepts pipe with SDR35, ASTM D3034 or equivalent O.D. specification in 8", 10", 12", 15", 18", 21", 24", 27" and 30" sizes (for 4" and 6" sizes, refer to **Fatboy Specifications**)

B. Curvature varies with mainline diameters

C. Spigot end PVC SDR35, ASTM D3034 Diameters: 8", 10", 12", 15", 18", 21", 24", 27" and 30"

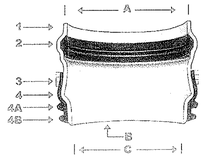

PART	PART NAME	MATERIALS
1	Hub adaptor	PVC SDR35 ASTM D3034
2	Rubber Gasket	ASTM F477
3	Securing Clamp*	Band SS #301 Screw SS #305 Housing SS #301 ASTM F477
4	Rubber Sleeve (available in Nitrite and EPDM by special order)	
4A	Upper Segment**	
4B	Lower Segment***	

* Optional: #316 Stainless Steel band, screw and housing
**Distance between 4A and 4B will vary by product type
***Will not appear on rubber sleeves for concrete or clay pipe

INSERTA TEE SIZE	HOLE DIAMETER
8" (200 mm)	8 ¾" (222 mm)
10" (250 mm)	10 ¾" (276 mm)
12" (300 mm)	12 ¾" (327 mm)
15" (375 mm)	15 15/16" (402 mm)
18" (450 mm)	19 3/16" (503 mm)
21" (525 mm)	22 9/16" (573 mm)
24" (600 mm)	25 5/16" (643 mm)
27" (675 mm)	28 ½" (724 mm)
30" (750 mm)	32 17/32" (826 mm)

NOTE: Recommended method of cutting hole is with hole saw for PVC and other plastics, and diamond bit for concretes, clay, FRP and D.I. (See installation instructions. Hole saws are available for purchase or rent.)

Project Name:	Lateral Size:
Type of Mainline Pipe or Structure:	Mainline Size:

INSERTA TEE PO BOX 714 CORNELIUS, OR 97116 (503) 357-2110 FAX: (503) 359-5417 sales@insertatee.com

©Inserta Fittings Co. March, 2011

FOR REFERENCE PURPOSES ONLY. CONTACT TURF EQUIPMENT & SUPPLY COMPANY FOR FINAL SPECIFICATIONS.

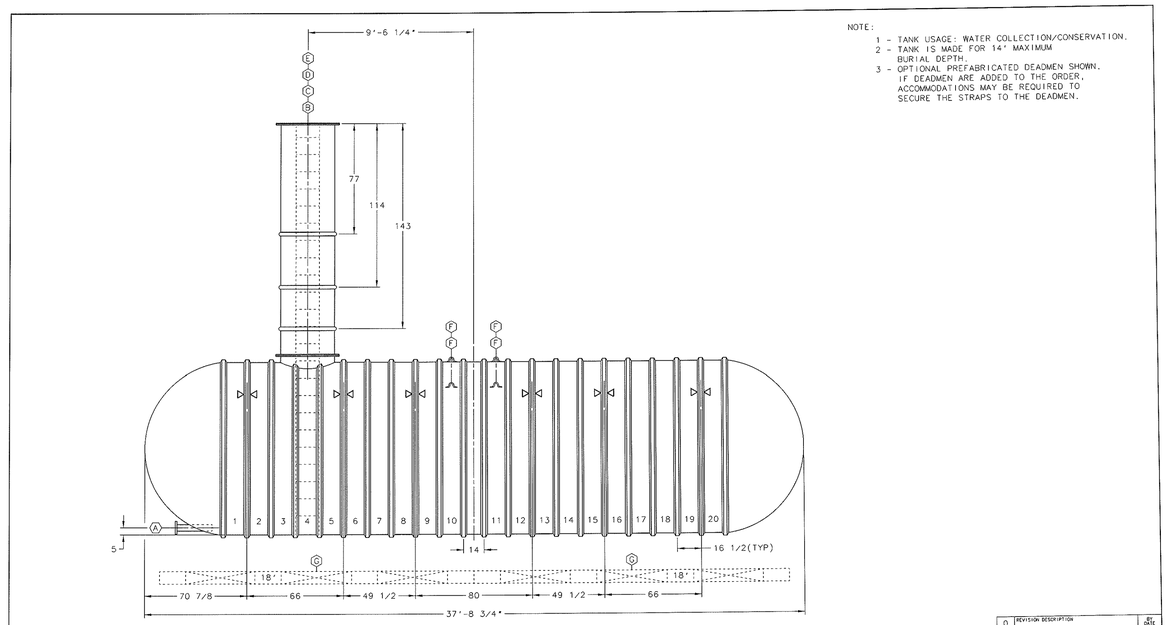

NOTE:
1 - TANK USAGE: WATER COLLECTION/CONSERVATION.
2 - TANK IS MADE FOR 14' MAXIMUM BURIAL DEPTH.
3 - OPTIONAL PREFABRICATED DEADMEN SHOWN. IF DEADMEN ARE ADDED TO THE ORDER, ACCOMMODATIONS MAY BE REQUIRED TO SECURE THE STRAPS TO THE DEADMEN.

ITEM	QTY	DESCRIPTION	ITEM	QTY	DESCRIPTION
A	1	4"DIA FLANGED & GUSSETED HORIZONTAL NOZZLE	E	1	13'-6" HIGH FIBERGLASS LADDER (16" WIDE, EXTENSION MOUNTED)
B	1	36"DIA MANWAY WITH BLANK COVER	F	4	LIFTING LUG (2 EXTRA)
C	1	36"DIA x 13'-6"HIGH MANWAY EXTENSION	G	4	18' PREFABRICATED CONCRETE DEADMEN (OPTIONAL)
D	1	10' HIGH FIBERGLASS LADDER (16" WIDE, TANK MOUNTED)	⋈	6	HOLD DOWN STRAP LOCATION

REVISION DESCRIPTION	BY DATE
0 -	-

XERXES® a zcl company

10'DIA SW CAP 20,000 GALLONS COOK

D 640-022 00

1/37

UNDERGROUND TANK 'A'

NOT TO SCALE

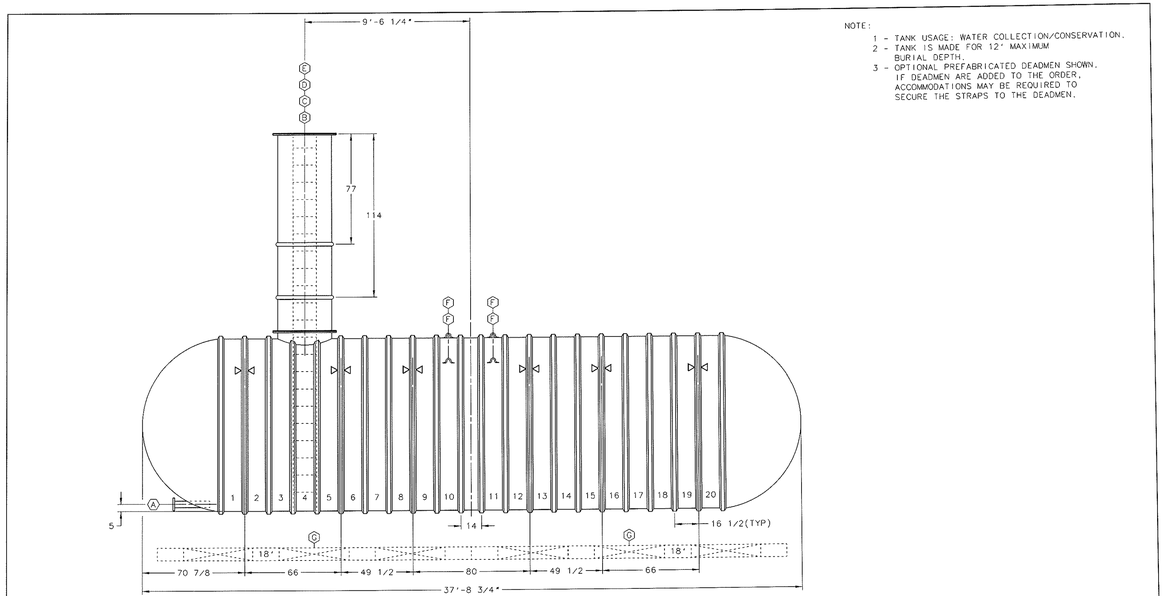

NOTE:
1 - TANK USAGE: WATER COLLECTION/CONSERVATION.
2 - TANK IS MADE FOR 12' MAXIMUM BURIAL DEPTH.
3 - OPTIONAL PREFABRICATED DEADMEN SHOWN. IF DEADMEN ARE ADDED TO THE ORDER, ACCOMMODATIONS MAY BE REQUIRED TO SECURE THE STRAPS TO THE DEADMEN.

ITEM	QTY	DESCRIPTION	ITEM	QTY	DESCRIPTION
A	1	4"DIA FLANGED & GUSSETED HORIZONTAL NOZZLE	E	1	11'-6" HIGH FIBERGLASS LADDER (16" WIDE, EXTENSION MOUNTED)
B	1	36"DIA MANWAY WITH BLANK COVER	F	4	LIFTING LUG (2 EXTRA)
C	1	36"DIA x 11'-6"HIGH MANWAY EXTENSION	G	4	18' PREFABRICATED CONCRETE DEADMEN (OPTIONAL)
D	1	10' HIGH FIBERGLASS LADDER (16" WIDE, TANK MOUNTED)	⋈	6	HOLD DOWN STRAP LOCATION

REVISION DESCRIPTION	BY DATE
0 -	-

XERXES® a zcl company

10'DIA SW CAP 20,000 GALLONS COOK

D 640-023 00

2/37

UNDERGROUND TANK 'B'

NOT TO SCALE

HIBBELN ENGINEERING COMPANY, L.L.C.
CONSULTING ENGINEERS
215-619-9070 PA, NJ, MD & DE
593 Skippack Pike, Suite 300
Blue Bell, Pennsylvania 19422
www.hibbelnengineering.com
IN CONJUNCTION WITH:
Land Concepts
593 Skippack Pike • Suite 300 • Blue Bell, PA 19422

COOK TRACT
ATHLETIC FIELDS

PREPARED FOR
WHITPAIN TOWNSHIP

SITE SITUATE IN
WHITPAIN TOWNSHIP
MONTGOMERY COUNTY, PENNSYLVANIA

ALL DRAWINGS, SPECIFICATIONS AND COPIES THEREOF FURNISHED BY HIBBELN ENGINEERING COMPANY, L.L.C. ARE AND SHALL REMAIN THE PROPERTY OF HIBBELN ENGINEERING COMPANY, L.L.C. THEY ARE NOT TO BE USED IN WHOLE OR IN PART FOR ANY PURPOSE OTHER THAN THE SPECIFIC PROJECT FOR WHICH THEY WERE PREPARED BY HIBBELN ENGINEERING COMPANY, L.L.C. AND SHALL NOT BE LOANED, COPIED OR DISCLOSED TO ANY UNAUTHORIZED PERSON WITHOUT THE WRITTEN CONSENT OF HIBBELN ENGINEERING COMPANY, L.L.C. © HIBBELN ENGINEERING COMPANY, L.L.C. 2011

NO.	REVISIONS	PLAN ORIGINATION DATE
6	PER ADDITION OF SEDIMENT BASIN B PHASE 4 PLAN	JUNE 18, 2012
5	PER MCCD LETTER (2-9-12)	FEBRUARY 10, 2012
4	PER STORM SYSTEM 'B'	JANUARY 31, 2012
3	PER SALFORD TWP. (1-17-12)	JANUARY 18, 2012
2	PER MUNICIPAL REVIEW COMMENTS	NOVEMBER 22, 2011
1	POST COMPLETION PLAN	AUGUST 26, 2011

HIBBELN ENGINEERING COMPANY, L.L.C.
CONSULTING ENGINEERS

IRRIGATION TANK DETAILS PLAN

COOK TRACT
ATHLETIC FIELDS
SITE SITUATE IN
WHITPAIN TOWNSHIP
MONTGOMERY COUNTY, PENNSYLVANIA

PROJECT MANAGER: DSC/AJH	DRAFTED BY: MLW
PROJECT NUMBER: 12460	DRAWING FILE: #12460_SHT29-37
PLAN SCALE: N.T.S.	PLAN SHEET NUMBER 37 OF 38